ENGINEERING
TOMORROW

Service **Manual Danfoss Burner Components**

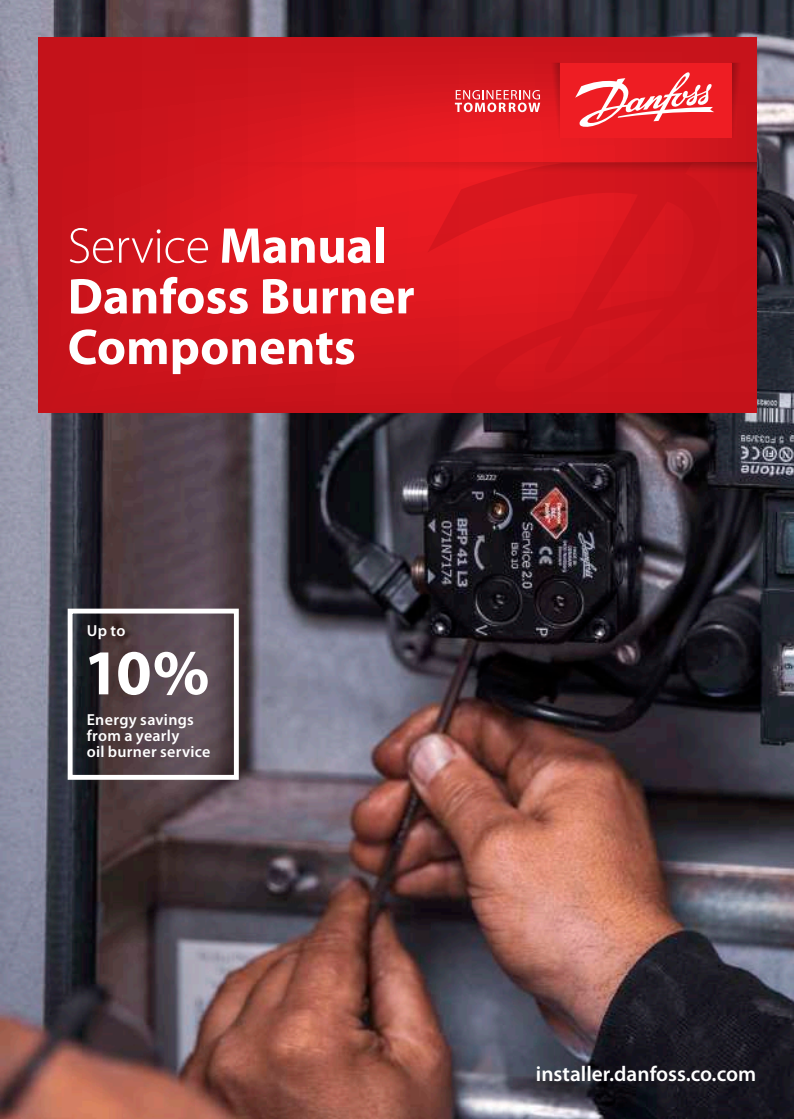

Up to

10%

Energy savings from a yearly oil burner service

installer.danfoss.co.com

Good service is to fix customers' problems. Excellent service is to prevent those problems from occurring.

Dear Danfoss partner,

Your oil burner needs the same attention as your car in order to perform at its best. Regular inspection and servicing are essential to ensure that it is running reliably and at optimum efficiency. By servicing your oil burner on a yearly basis incl. replacement of components I ike nozzles, filters and coils the burner can reduce oil consumption by as much as 10%. Keeping it free from soot can achieve even greater savings.

Danfoss offers a complete range of components for most oil burners on the market. The service manual is intended to make it easy for you to find the most suitable components and service from the comprehensive Danfoss range.

Happy service!
Your Danfoss Team

Contents

Links to Burner Components instruction videos ..... Page 3

1. Oil pumps
   Contents Oil pumps ..... Page 9
   Conversion ..... Page 10
   Spare parts and accessories ..... Page 54
   Dimensions ..... Page 57
   Connections ..... Page 63

2. Oil nozzles
   Contents Oil nozzles ..... Page 68
   Introduction ..... Page 69
   Brass nozzles OD, LE and HR/SR ..... Page 70
   Steel nozzles HFD/HD and SFD/SD ..... Page 75
   Conversion ..... Page 76
   Dimensions ..... Page 78
   Marking ..... Page 81

3. Oil burner controls
Contents Oil burner controls ..... Page 82
Introduction ..... Page 83
Conversion ..... Page 85
Dimensions ..... Page 91
Flame sensors ..... Page 92
Service ..... Page 94
Accessories ..... Page 95
Flash codes ..... Page 96

4. Ignition units
Contents Ignition units ..... Page 97
Introduction ..... Page 98
Conversion ..... Page 100
Dimensions ..... Page 107
Service ..... Page 109

5. Oil preheaters
Contents Oil preheaters ..... Page 111
Conversion ..... Page 112
Dimensions ..... Page 113

Links to Burner Components instruction videos

Changing the oil nozzle
Instructions for a safe and optimal change of a Danfoss oil nozzle on an oil burner.

Changing the oil pump (BFP)
Instructions for a safe and optimal changing of the Danfoss oil pump (BFP).

Changing the cartridge filter in the oil pump (BFP 20, 21, 41 and 52)
Instructions for a safe and optimal change of a cartridge filter in a Danfoss oil pump (BFP 20, 21, 41 and 52).

Changing the ring filter in the oil pump (BFP 10 and 11)
Instructions for a safe and optimal change of ring filter in a Danfoss oil pump (BFP 10 and 11).

Changing the coil on the oil pump (BFP)
Instructions for a safe and optimal change of the coil on a Danfoss oil pump (BFP).

Changing the solenoid valve (NC) on the oil pump (BFP)
Instructions for a safe and optimal change of the solenoid valve (NC valve) on a Danfoss oil pump (BFP).

Converting the oil pump from a 1 to a 2 pipe system (BFP 20, 21, 41, 52)
Instructions for a safe and optimal conversion from a one pipe system to a two pipe system on a Danfoss oil pump (BFP 20, 21, 41 and 52).

Converting the oil pump from a 1 to a 2 pipe system (BFP 10 and 11)
Instructions for a safe and optimal conversion from a 1 pipe to a 2 pipe system (BFP 10 and 11)

Bleeding the oil pump (BFP 20, 21, 41 and 52)
Instructions for a safe and optimal bleeding of a Danfoss oil pump (BFP 20, 21, 41 and 52).

Bleeding the oil pump (BFP 10 and 11)
Instructions for a safe and optimal bleeding of the oil pump (BFP 10 and 11)

Bleeding the oil pump (BFP with bleed plug)
Instructions for a safe and optimal bleeding of the oil pump (BFP with bleed plug)

Changing the LE valve in the preheater
Instructions for a safe and optimal change of the LE valve in the preheater

Changing the oil burner control (OBC with a UV sensor)
Instructions for a safe and optimal change of the oil burner control (OBC with a UV sensor)

Reading failure codes on the oil burner control (OBC)
Instructions for reading failure codes on the oil burner control (OBC)

Changing the oil burner control (OBC with a LD/LDS sensor)
Instructions for a safe and optimal change of oil burner control (OBC with a LD/LDS sensor)

Changing the flame sensor (UV sensor)
Instructions for a safe and optimal change of the flame sensor (UV sensor)

Changing the flame sensor (LD/LDS sensor)
Instructions for a safe and optimal change of the flame sensor (LD/LDS sensor)

Changing the ignition unit (EBI3 to an EBI4)
Instructions for a safe and optimal change of ignition unit (EBI3 to an EBI4)

Contents

Introduction		Page	10
Conversion	Danfoss RS -> RSA Service	Page	12
Conversion	RSA/RSH -> RSA Service	Page	13
Conversion	Danfoss RSL -> BFP Service	Page	15
Conversion	Danfoss MSL -> BFP Service	Page	17
Conversion	Danfoss MS -> BFP Service	Page	20
Conversion	Danfoss BFP -> BFP Service	Page	22
Conversion	Suntec -> BFP Service	Page	37
Conversion	Eckerle -> BFP Service	Page	42
Conversion	DELTA -> BFP Service	Page	49
Spare parts and accessories	RSA/RSH	Page	54
Spare parts and accessories	BFP	Page	55
Accessories	BFP	Page	56
Dimensions	BFP	Page	57
Changeover 1-2 pipe	RSA/BFP	Page	61
Connections	RSA	Page	63
Connections	BFP	Page	64

Oil pump conversion

The tables below give the following pump conversions:

- Danfoss RS pumps to RSA pumps
- Danfoss RSL/MSL/MS/BFP pumps to BFP service pumps
- Suntec pumps to BFP service pumps
- Eckerle pumps to BFP service pumps
- Delta pumps to BFP service pumps

Using Danfoss service pumps BFP 21 L3 and BFP 21 R3 it is possible to maintain 90% of existing small burners. In other cases it can be difficult to find the correct Danfoss service pump. The main purpose of the conversion tables is to make the replacement of such pumps easier.

The tables are compiled as follows:

- Column 1 always gives the pump type to be replaced.

- Column 2 gives the code number of the pump to be replaced.

  Note: Where Eckerle UNI-pumps are concerned, column 1 gives the old and column 2 the new designation.

- Column 3 states whether the pump is for 1-pipe or 2-pipe operation.

  Note: With the MS pump, the numbers „1 +2“ are added because this particular unit has automatic changeover. Eckerle pumps have no suffixes.

- Column 5 gives the Danfoss pump type able to replace the existing pump.

- Column 6 gives the corresponding Danfoss code number.

- The last column, „Comments/accessories“, refers to special characteristics and features. Please note that in some cases accessories are necessary.

Explanation – code number and comments:

When changing over from pumps with hydraulic shut-off valve (RSL and MSLC) to BFP with electric shut-off valve (BFP 11, 21 and 41) a cable must be ordered for connection to the motor terminals in the oil burner control.

Some pump types carry the comment „No repl.". There are several possible explanations, among them:

- The BFP service pump cannot supply the required nozzle capacity.
- The BFP service pump does not have the required coil voltage. BFP coils are only available for 220-240 V a.c., 110-120V a.c., 24V a.c./12 V d.c. and 24 V d.c.
- The shaft of the BFP service pump is not of a suitable diameter.
- With the BFP service pump it is possible that a hydraulic cylinder might be connected to the pressure gauge port on the front.

The position of connections and clockwise/counterclockwise indication are always given when looking on the shaft end. See Changeover 1-2 pipe.

Before fitting a service pump, a check must be made of whether it is set for 1-pipe or 2-pipe operation. If necessary, the pump must be reset to suit the system in which it is being installed.

As per October 2017 all service pumps have been upgraded to Diamond Series 2.0 with Danfoss DLC inside™ and extra durable Diamond Coil. All service pumps are released for B10 bio heating oil.

Conversion of industrial pumps:
Pump types RSB/RSBK, RSF/RSFH, KSM, KSN, KSB, KSV, KSVB and pressure regulating valves: B-PP, B-P, B-G, B-GH, B-GHG and former Safag products please contact HP Pumps; www.hptechnik.com

Conversion Danfoss RS ➡ RSA Service

Danfoss oil pumps – older series			➡	Relevant Danfoss types		
Type	Code no.	1-2 pipe	➡	Type	Code no.	Comments/accessories
RS 28	070-5300	1	➡	RSA 28	070-5376	
RS 28	070L5376	1	➡	RSA 28	070L5370	
RS 28	070-5302	2	➡	RSA 28	070-5376	+ mount 2-pipe screw
RS 28	070L5370	2	➡	RSA 28	070L5370	+ mount 2-pipe screw
RS 28	070-5310	1	➡		No repl.	
RS 28	070L5310	1	➡		No repl.	
RS 28	070-5312	2	➡		No repl.	
RS 28	070L5312	2	➡		No repl.	
RS 28	070-5322	2	➡		No repl.	
RS 28	070L5322	2	➡		No repl.	
RS 40	070-3200	1	➡	RSA 40	070-3230	
RS 40	070L3200	1	➡	RSA 40	070L3230	
RS 40	070-3202	2	➡	RSA 40	070-3230	+ mount 2-pipe screw
RS 40	070L3202	2	➡	RSA 40	070L3230	+ mount 2-pipe screw
RS 40	070-3210	1	➡	RSA 40	070-3240	
RS 40	070L3210	1	➡	RSA 40	070L3244	
RS 40	070-3212	2	➡	RSA 40	070-3240	+ mount 2-pipe screw
RS 40	070L3212	2	➡	RSA 40	070L3244	+ mount 2-pipe screw
RS 40	070-3222	2	➡	RSA 40	070-3249	
RS 40	070L3222	2	➡	RSA 40	070L3249	
RS 60	070-3300	1	➡	RSA 60	070-3354	
RS 60	070L3300	1	➡	RSA 60	070L3350	
RS 60	070-3302	2	➡	RSA 60	070-3354	+ mount 2-pipe screw
RS 60	070L3302	2	➡	RSA 60	070L3350	+ mount 2-pipe screw

Conversion Danfoss RS ➡ RSA Service

Danfoss oil pumps – older series			➡	Relevant Danfoss types		
Type	Code no.	1-2 pipe	➡	Type	Code no.	Comments/accessories
RS 60	070-3310	1	➡	RSA 60	070-3360	
RS 60	070L3310	1	➡	RSA 60	070L3366	
RS 60	070-3312	2	➡	RSA 60	070-3360	+ mount 2-pipe screw
RS 60	070L3312	2	➡	RSA 60	070L3362	

Conversion Danfoss RSA/RSH ➡ RSA Service

Danfoss oil pumps – older series			➡	Relevant Danfoss types		
Type	Code no.	1-2 pipe	➡	Type	Code no.	Comments/accessories
RSA 40	070-3232	2	➡	RSA 40	070-3230	+ mount 2-pipe screw
RSA 40	070-3242	2	➡	RSA 40	070-3240	
RSA 60	070-3350	1	➡	RSA 60	070-3354	
RSA 60	070-3352	2	➡	RSA 60	070-3354	+ mount 2-pipe screw
RSA 60	070-3362	2	➡	RSA 60	070-3360	
RSA 125	070-3402	2	➡	RSA 125	070-3400	
RSA 125	070-3412	2	➡	RSA 125	070-3410	
RSA 95	070-3472	2	➡	RSA 95	070-3470	
RSA 95	070-3482	2	➡	RSA 95	070-3480	
RSA 28	070-5332	2	➡		No repl.	
RSA 28	070-5370	1	➡	RSA 28	070-5376	
RSA 28	070-5372	2	➡	RSA 28	070-5376	+ mount 2-pipe screw
RSA 28	070-5380	1	➡		No repl.	
RSA 28	070-5382	2	➡		No repl.	
RSA 40	070L3232	2	➡	RSA 40	070L3230	+ mount 2-pipe screw
RSA 40	070L3240	1	➡	RSA 40	070L3244	

Conversion Danfoss RSA/RSH ➨ RSA Service

Danfoss oil pumps – older series			➨	Relevant Danfoss types		
Type	Code no.	1-2 pipe	➨	Type	Code no.	Comments/accessories
RSA 40	070L3242	2	➨	RSA 40	070L3244	+ mount 2-pipe screw
RSA 40	070L3247	1	➨	RSA 40	070L3248	
RSA 60	070L3356	2	➨	RSA 60	070L3350	+ mount 2-pipe screw
RSA 60	070L3360	1	➨	RSA 60	070L3366	
RSA 125	070L3402	2	➨	RSA 125	070L3400	+ mount 2-pipe screw
RSA 125	070L3403	2	➨		No repl.	
RSA 125	070L3413	1	➨	RSA 125	070L3410	+070-0211
RSA 125	070L3422	2	➨	RSA 125	070L3410	use 15-30 bar spring 070-0031+ 070-0211 + mount 2 -pipe screw
RSA 95	070L3472	2	➨	RSA 95	070L3470	+ mount 2-pipe screw
RSA 95	070L3474	1	➨		No repl.	
RSA 28	070L5332	2	➨		No repl.	
RSA 28	070L5372	2	➨	RSA 28	070L5370	+ mount 2-pipe screw
RSA 28	070L5380	1	➨		No repl.	
RSA 28	070L5382	2	➨		No repl.	
RSH 63	070-6300	1	➨	RSA 60	070-3354	use 15-30 bar spring 070-0031 + 070-0042
RSH 63	070-6310	1	➨	RSA 60	070-3360	use 15-30 bar spring 070-0031 + 070-0042
RSH 125	070-6400	1	➨	RSA 125	070-3400	use 15-30 bar spring 070-0031
RSH 125	070-6410	1	➨	RSA 125	070-3410	use 15-30 bar spring 070-0031
RSH 95	070-6480	1	➨	RSA 95	070-3480	use 15-30 bar spring 070-0031
RSH 32	070-7300	1	➨	RSA 40	070-3230	use 15-30 bar spring 070-0031
RSH 32	070-7310	1	➨	RSA 40	070-3240	use 15-30 bar spring 070-0031
RSH 63	070L6300	1	➨	RSA 60	070L3350	use 15-30 bar spring 070-0031 + 070-0042
RSH 63	070L6310	1	➨	RSA 60	070L3366	use 15-30 bar spring 070-0031 + 070-0042
RSH 125	070L6400	1	➨	RSA 125	070L3400	use 15-30 bar spring 070-0031
RSH 125	070L6410	1	➨	RSA 125	070L3410	use 15-30 bar spring 070-0031
RSH 95	070L6480	1	➨	RSA 95	070L3482	use 15-30 bar spring 070-0031
RSH 32	070L7300	1	➨	RSA 40	070L3230	use 15-30 bar spring 070-0031
RSH 32	070L7310	1	➨	RSA 40	070L3244	use 15-30 bar spring 070-0031

Conversion Danfoss RSL ➨ BFP Service

Danfoss oil pumps – older series			➨	Relevant Danfoss types		
Type	Code no.	1-2 pipe	➨	Type	Code no.	Comments/accessories
RSL 028	070-4330	1	➨	BFP 21 R3	071N7171[1)]	+ cable, L = 710 mm: 071G0204
RSL 028	070L4330	1	➨	BFP 21 L3	071N7170[1)]	
RSL 028	070-4332	2	➨	BFP 21 R3	071N7171[1)]	
RSL 028	070L4332	2	➨	BFP 21 L3	071N7170[1)]	
RSL 028	070-4340	1	➨	BFP 21 R3	071N7171[1)]	+ cable, L = 710 mm: 071G0204 + bush ∅54: 071B0011
RSL 028	070L4340	1	➨	BFP 21 L3	071N7170[1)]	
RSL 028	070-4342	2	➨	BFP 21 R3	071N7171[1)]	
RSL 028	070L4342	2	➨	BFP 21 L3	071N7170[1)]	
RSL 050	070-3130	1	➨	BFP 21 R5	071N7173[1)]	+ cable, L = 710 mm: 071G0204
RSL 050	070L3130	1	➨	BFP 21 L5	071N7172[1)]	
RSL 050	070-3132	2	➨	BFP 21 R5	071N7173[1)]	
RSL 050	070L3132	2	➨	BFP 21 L5	071N7172[1)]	
RSL 050	070-3140	1	➨	BFP 21 R5	071N7173[1)]	+ cable, L = 710 mm: 071G0204 + bush ∅54: 071B0011
RSL 050	070L3140	1	➨	RFP 21 L5	071N7172[1)]	
RSL 050	070-3142	2	➨	BFP 21 R5	071N7173[1)]	
RSL 050	070L3142	2	➨	BFP 21 L5	071N7172[1)]	

1) The solenoid coil must be connected in parallel with the burner motor.

Conversion Danfoss RSLB ➨ BFP Service

Danfoss oil pumps – older series			➨	Relevant Danfoss types		
Type	Code no.	1-2 pipe	➨	Type	Code no.	Comments/accessories
RSLB 028	070-4030	1	➨	BFP 20 R3	071N7169[2)]	
RSLB 028	070L4030	1	➨	BFP 20 L3	071N7168[2)]	
RSLB 028	070-4032	2	➨	BFP 20 R3	071N7169	
RSLB 028	070L4032	2	➨	BFP 20 L3	071N7168	
RSLB 028	070-4040	1	➨	BFP 20 R3	071N7169	
RSLB 028	070L4040	1	➨	BFP 20 L3	071N7168	+ bush ∅54: 071B0011
RSLB 028	070-4042	2	➨	BFP 20 R3	071N7169	
RSLB 028	070L4042	2	➨	BFP 20 L3	071N7168	
RSLB 050	070-4130	1	➨	BFP 20 R5	071N7129[2)]	
RSLB 050	070L4130	1	➨	BFP 20 L5	071N7126[2)]	
RSLB 050	070-4132	2	➨	BFP 20 R5	071N7129	
RSLB 050	070L4132	2	➨	BFP 20 L5	071N7126	
RSLB 050	070-4140	1	➨	BFP 20 R5	071N7129	
RSLB 050	070L4140	1	➨	BFP 20 L5	071N7126	+ bush ∅54: 071B0011
RSLB 050	070-4142	2	➨	BFP 20 R5	071N7129	
RSLB 050	070L4142	2	➨	BFP 20 L5	071N7126	

2) This pump is delivered for 2-pipe operation. A changeover to 1-pipe operation is possible, see Changeover 1 - 2 pipe.

Conversion Danfoss MSLA ➡ BFP Service

Danfoss oil pumps – older series			➡	Relevant Danfoss types			
Type	Code no.	1-2 pipe	➡	Type	Code no.	Comments/accessories	
MSLA 032	071B0101	1	➡	BFP 21 R3	071N7171 2)		
MSLA 032	071B0102	2	➡	BFP 21 R3	071N7171		
MSLA 032	071B0103	1	➡		No repl.	MSLA = 100 V a.c.	
MSLA 032	071B0104	2	➡		No repl.		
MSLA 032	071B0105	1	➡	BFP 21 R3	071N7171 2)	+ coil 110-120 V a.c.: 071N0061	
MSLA 032	071B0108	2	➡		No repl.	MSLA = 200 V a.c.	
MSLA 032	071B0112	2	➡	BFP 21 R3	071N7171		
MSLA 032	071B0113	1	➡	BFP 21 R3	071N7171 2)		
MSLA 032	071B0132	2	➡	BFP 21 R3	071N7171	+ coil 24 V a.c.: 071N0062	
MSLA 032	071B1101	1	➡	BFP 21 L3	071N7170 2)		
MSLA 032	071B1102	2	➡	BFP 21 L3	071N7170		
MSLA 032	071B1103	1	➡		No repl.	MSLA 100 V a.c.	+ cable, L = 710 mm: 071G0204
MSLA 032	071B1104	2	➡		No repl.		
MSLA 032	071B1105	1	➡	BFP 21 L3	071N7170 2)	+ coil 110-120 V a.c.: 071N0061	
MSLA 032	071B1111	1	➡	BFP 21 L3	071N7170 2)		
MSLA 032	071B1112	2	➡	BFP 21 L3	071N7170		
MSLA 032	071B1114	2	➡	BFP 21 L3	071N7170		
MSLA 032	071B1118	2	➡	BFP 21 L3	071N7170		
MSLA 032	071B1120	2	➡	BFP 21 L3	071N7170		
MSLA 032	071B1126	2	➡	BFP 21 L3	071N7170		
MSLA 032	071B1128	2	➡	BFP 21 L3	071N7170		
MSLA 032	071B1132	2	➡	BFP 21 L3	071N7170	+ coil 24 V a.c.: 071N0062	
MSLA 032	071B1134	2	➡	BFP 21 L3	071N7170		
MSLA 032	071B1136	2	➡	BFP 21 L3	071N7170		
MSLA 032	071B1138	2	➡	BFP 21 L3	071N7170		

2) This pump is delivered for 2-pipe operation. A changeover to 1-pipe operation is possible, see Changeover 1 - 2 pipe.

Conversion Danfoss MSLA/MSLB ➨ BFP Service

Danfoss oil pumps – older series			➨	Relevant Danfoss types			
Type	Code no.	1-2 pipe	➨	Type	Code no.	Comments/accessories	
MSLA 050	071B0201	1	➨	BFP 21 R5	071N7173[2)]		+ cable, L = 710 mm, 071G0204
MSLA 050	071B0202	2	➨	BFP 21 R5	071N7173		
MSLA 050	071B0203	1	➨	BFP 21 R5	071N7173[2)]	MSLA = 100 V a.c. + coil 110-120 V a.c.: 071N0061	
MSLA 050	071B0204	2	➨	BFP 21 R5	071N7173		
MSLA 050	071B0205	1	➨	BFP 21 R5	071N7173[2)]		
MSLA 050	071B0208	2	➨	BFP 21 R5	071N7173	MSLA = 200 V a.c.	
MSLA 050	071B1201	1	➨	BFP 21 L5	071N7172[2)]		
MSLA 050	071B1202	2	➨	BFP 21 L5	071N7172		
MSLA 050	071B1203	1	➨	BFP 21 L5	071N7172[2)]	MSLA = 100 V a.c. + coil 110-120 V a.c.: 071N0061	
MSLA 050	071B1204	2	➨	BFP 21 L5	071N7172		
MSLB 032	071B2101	1	➨	BFP 20 R3	071N7169[2)]		
MSLB 032	071B3101	1	➨	BFP 20 L3	071N7168[2)]		
MSLB 032	071B2102	2	➨	BFP 20 R3	071N7169		
MSLB 032	071B2104	2	➨	BFP 20 R3	071N7169		
MSLB 032	071B3102	2	➨	BFP 20 L3	071N7168		
MSLB 050	071B2201	1	➨	BFP 20 R5	071N7129[2)]		
MSLB 050	071B3201	1	➨	BFP 20 L5	071N7126[2)]		
MSLB 050	071B2202	2	➨	BFP 20 R5	071N7129		
MSLB 050	071B2203	1	➨	BFP 20 R5	071N7129[2)]		
MSLB 050	071B3202	2	➨	BFP 20 L5	071N7126		

2) This pump is delivered for 2-pipe operation. A changeover to 1-pipe operation is possible, see Changeover 1 - 2 pipe.

Conversion Danfoss MSLC/MSLD ➨ BFP Service

Danfoss oil pumps – older series			➨	Relevant Danfoss types		
Type	Code no.	1-2 pipe	➨	Type	Code no.	Comments/accessories
MSLC 032	071B4101	1	➨	BFP 21 R3	071N7171 1) 2)	+ cable, L = 710 mm: 071G0204
MSLC 032	071B5101	1	➨	BFP 21 L3	071N7170 1) 2)	
MSLC 032	071B4102	2	➨	BFP 21 R3	071N7171 1)	
MSLC 032	071B5102	2	➨	BFP 21 L3	071N7170 1)	
MSLC 032	071B4103	1	➨	BFP 21 R3	071N7171 1) 2)	
MSLC 032	071B4105	1	➨	BFP 21 R3	071N7171 1) 2)	
MSLC 050	071B4201	1	➨	BFP 21 R5	071N7173 1) 2)	
MSLC 050	071B5201	1	➨	BFP 21 L5	071N7172 1) 2)	
MSLC 050	071B4202	2	➨	BFP 21 R5	071N7173 1)	
MSLC 050	071B5202	2	➨	BFP 21 L5	071N7172 1)	
MSLD 032	071B6101	1	➨	BFP 20 R3	071N7169 2)	
MSLD 032	071B6102	2	➨	BFP 20 R3	071N7169	
MSLD 032	071B7101	1	➨	BFP 20 L3	071N7168 2)	
MSLD 032	071B7102	2	➨	BFP 20 L3	071N7168	
MSLD 032	071B6201	1	➨	BFP 20 R5	071N7129 2)	
MSLD 050	071B6202	2	➨	BFP 20 R5	071N7129	
MSLD 050	071B7201	1	➨	BFP 20 L5	071N7126 2)	
MSLD 050	071B7202	2	➨	BFP 20 L5	071N7126	

1) The solenoid coil must be connected in parallel with the burner motor.
2) This pump is delivered for 2-pipe operation. A changeover to 1-pipe operation is possible, see Changeover 1 - 2 pipe.

Conversion Danfoss MS ➨ BFP Service

Danfoss oil pumps – older series			➨	Relevant Danfoss types		
Type	Code no.	1-2 pipe	➨	Type	Code no.	Comments/accessories
MS 10 L3	071G0125	1 + 2	➨	BFP 20 L3	071N7168[2)]	
MS 10 R3	071G0123	1 + 2	➨	BFP 20 R3	071N7169[2)]	
MS 10 L3	071G0153	1 + 2	➨		No repl.	
MS 10 R3	071G0175	1 + 2	➨	BFP 20 R3	071N7169[2)]	
MS 10 R5	071G0176	1 + 2	➨	BFP 20 R5	071N7129[2)]	
MS 10 L5	071G0128	1 + 2	➨	BFP 20 L5	071N7126[2)]	
MS 10 R5	071G0124	1 + 2	➨	BFP 20 R5	071N7129[2)]	
MS 11 L3	071G0117	1 + 2	➨	BFP 21 L3	071N7170[2)]	
MS 11 R3	071G0118	1 + 2	➨	BFP 21 R3	071N7171[2)]	
MS 11 L3	071G0121	1 + 2	➨	BFP 21 L3	071N7170[2)]	
MS 11 L3	071G0134	1 + 2	➨	BFP 21 L3	071N7170[2)]	
MS 11 L3	071G0137	1 + 2	➨	BFP 21 L3	071N7170[2)]	
MS 11 L3	071G0139	1 + 2	➨	BFP 21 L3	071N7170[2)]	
MS 11 L3	071G0154	1 + 2	➨	BFP 21 L3	071N7170[2)]	+ coupling with single flat in hole (D-shaped)
MS 11 L3	071G0156	1 + 2	➨	BFP 21 L3	071N7170[2)]	+ coil 24 V a.c.: 071N0062
MS 11 L3	071G0158	1 + 2	➨	BFP 21 L3	071N7170[2)]	
MS 11 R3	071G0160	1 + 2	➨	BFP 21 R3	071N7171[2)]	+ coil 24 V a.c.: 071N0062
MS 11 L3	071G0162	1 + 2	➨	BFP 11 L3	071N7141[3)]	
MS 11 L3	071G0163	1 + 2	➨	BFP 11 L3	071N7141[3)]	+ coil 24 V a.c.: 071N0062
MS 11 L3	071G0165	1	➨	BFP 21 L3	071N7170[2)]	MS has manual conversion
MS 11 R3	071G0173	1 + 2	➨	BFP 21 R3	071N7171[2)]	
MS 11 R5	071G0174	1 + 2	➨	BFP 21 R5	071N7173[2)]	
MS 11 R3	071G0177	1 + 2	➨	BFP 21 R3	071N7171[2)]	
MS 11 L3	071G0178	1 + 2	➨	BFP 21 L3	071N7170[2)]	

2) This pump is delivered for 2-pipe operation. A changeover to 1-pipe operation is possible, see Changeover 1 - 2 pipe.
3) This pump is delivered for 1-pipe operation. A changeover to 2-pipe operation is possible, see Changeover 1 - 2 pipe.

Conversion Danfoss MS ➨ BFP Service

Danfoss oil pumps – older series			➨	Relevant Danfoss types		
Type	Code no.	1-2 Strang	➨	Type	Code no.	Comments/accessories
MS 11 L3	071G0179	1 + 2	➨	BFP 21 L3	071N7170[2)]	Any hydraulic cylinder must be connected to the pressure gauge port on the front.
MS 11 L5	071G0127	1 + 2	➨	BFP 21 L5	071N7172[2)]	
MS 11 R5	071G0126	1 + 2	➨	BFP 21 R5	071N7173[2)]	
MS 12 L3	071G0115	1 + 2	➨		No repl.)	
MS 12 R3	071G0113	1 + 2	➨		No repl.	
MS 12 L5	071G0116	1 + 2	➨		No repl.	
MS 12 R5	071G0114	1 + 2	➨		No repl.	
MS 12 L3	071G0161	1 + 2	➨		No repl.	
MS 12E L3	071G0130	1 + 2	➨	BFP 52E L3	071N3201[2)]	
MS 12E R3	071G0129	1 + 2	➨	BFP 52E R3	071N3203[2)]	
MS 12E L5	071G0120	1 + 2	➨	BFP 52E L5	071N3202[2)]	
MS 12E R5	071G0119	1 + 2	➨	BFP 52E R5	071N3204[2)]	
MS 12E L3	071G0140	1 + 2	➨	BFP 52E L3	071N3201[2)]	
MS 12E L5	071G0181	1 + 2	➨	BFP 52E L5	071N3202[2)]	
MS 21 L3	071G0157	1 + 2	➨	BFP 21 L3	071N7170[2)]	
MS 21 R3	071G0167	1 + 2	➨	BFP 21 R3	071N7171[2)]	

2) This pump is delivered for 2-pipe operation. A changeover to 1-pipe operation is possible, see Changeover 1 - 2 pipe.

Conversion Danfoss BFP ➡ BFP Service

BFP – standard pump			➡	Relevant Danfoss types		
Type	Code no.	1-2 pipe	➡	Type	Code no.	Comments/accessories
BFP 11 L3	071N0101	2	➡	BFP 11 L3	071N7141[3)]	
BFP 21 L3	071N0102	2	➡	BFP 21 L3	071N7170	
BFP 11 L3	071N0103	2	➡	BFP 11 L3	071N7141[3)]	
BFP 21 L3	071N0104	2	➡	BFP 21 L3	071N7170	
BFP 11 L5	071N0105	2	➡	BFP 21 L5	071N7172	
BFP 21 L3	071N0107	2	➡	BFP 21 L3	071N7170	
BFP 20 L3	071N0108	1	➡	BFP 20 L3	071N7168[2)]	
BFP 21 R3	071N0109	2	➡	BFP 21 R3	071N7171	Any hydraulic cylinder must be connected to the pressure gauge port on the front.
BFP 21 L3	071N0111	2	➡	BFP 21 L3	071N7170	
BFP 21 R3	071N0112	2	➡	BFP 21 R3	071N7171	
BFP 21 L3	071N0113	2	➡	BFP 21 L3	071N7170	
BFP 11 L3	071N0114	2	➡	BFP 21 L3	071N7170	+ coupling with single flat in hole (D-shaped)
BFP 31 L3	071N0115	2	➡	BFP 21 L3	071N7170	
BFP 21 L5	071N0116	2	➡	BFP 21 L5	071N7172	Any hydraulic cylinder must be connected to the pressure gauge port on the front.
BFP 21 L3	071N0117	2	➡	BFP 21 L3	071N7170	+ coupling with single flat in hole (D-shaped)
BFP 20 R3	071N0118	1	➡	BFP 20 R3	071N7169[2)]	
BFP 21 L3	071N0119	2	➡	BFP 21 L3	071N7170	
BFP 21 R5	071N0120	1	➡	BFP 21 R5	071N7173[2)]	
BFP 21 L3	071N0122	1	➡	BFP 21 L3	071N7170[2)]	
BFP 21 L3	071N0123	2	➡	BFP 21 L3	071N7170	+ coil 110 V: 071N0061
BFP 21 L3	071N0124	2	➡	BFP 21 L3	071N7170	
BFP 20 L3	071N0125	2	➡	BFP 20 L3	071N7168	
BFP 20 L5	071N0126	2	➡	BFP 20 L5	071N7126	
BFP 20 L3	071N0127	1	➡	BFP 20 L3	071N7168[2)]	

2) This pump is delivered for 2-pipe operation. A changeover to 1-pipe operation is possible, see Changeover 1 - 2 pipe.
3) This pump is delivered for 1-pipe operation. A changeover to 2-pipe operation is possible, see Changeover 1 - 2 pipe.

Conversion Danfoss BFP ➨ BFP Service

BFP – standard pump			➨	Relevant Danfoss types		
Type	Code no.	1-2 pipe	➨	Type	Code no.	Comments/accessories
BFP 20 R3	071N0128	1	➨	BFP 20 R3	071N7169[2)]	
BFP 20 R5	071N0129	2	➨	BFP 20 R5	071N7129	
BFP 21 L3	071N0130	2	➨	BFP 21 L3	071N7170	
BFP 21 L3	071N0132	1	➨	BFP 21 L3	071N7170[2)]	
BFP 31 L3	071N0133	2	➨	BFP 21 L3	071N7170	+ coupling with single flat in hole (D-shaped)
BFP 41 L3	071N0135	2	➨	BFP 41 L3	071N7174	
BFP 21 R3	071N0136	1	➨	BFP 21 R3	071N7171[2)]	
BFP 41 R3	071N0137	2	➨	BFP 41 R3	071N7137	
BFP 21 L3	071N0138	2	➨	BFP 21 L3	071N7170	Old fittings must be used
BFP 20 R3	071N0140	2	➨	BFP 20 R3	071N7169	
BFP 11 L3	071N0141	1	➨	BFP 11 L3	071N7141	
BFP 11 L3	071N0142	1	➨	BFP 11 L3	071N7141	
BFP 11 R3	071N0143	1	➨	BFP 11 R3	071N7155	
BFP 11 L3	071N0144	2	➨	BFP 11 L3	071N7141[3)]	
BFP 11 R3	071N0145	2	➨	BFP 11 R3	071N7155[3)]	
BFP 11 L3	071N0146	2	➨	BFP 11 L3	071N7141[3)]	Old coil might be usable
BFP 21 L3	071N0147	2	➨	BFP 21 L3	071N7170	
BFP 21 L3	071N0148	2	➨	BFP 21 L3	071N7170	
BFP 31 L3	071N0149	2	➨	BFP 21 L3	071N7170	
BFP 21 L3	071N0150	2	➨	BFP 21 L3	071N7170	
BFP 21 L3	071N0151	2	➨	BFP 21 L3	071N7170	
BFP 11 L3	071N0152	2	➨	BFP 11 L3	071N7141[3)]	
BFP 11 L3	071N0153	2	➨	BFP 11 L3	071N7141[3)]	+ coil 24 V a.c.: 071N0062
BFP 21 R3	071N0154	1	➨	BFP 21 R3	071N7171[2)]	
BFP 11 R3	071N0155	1	➨	BFP 11 R3	071N7155	
BFP 21 L3	071N0156	1	➨	BFP 21 L3	071N7170[2)]	
BFP 21 R3	071N0157	1	➨	BFP 21 R3	071N7171[2)]	
BFP 21 L5	071N0158	1	➨	BFP 21 L5	071N7172[2)]	

2) This pump is delivered for 2-pipe operation. A changeover to 1-pipe operation is possible, see Changeover 1 - 2 pipe.
3) This pump is delivered for 1-pipe operation. A changeover to 2-pipe operation is possible, see Changeover 1 - 2 pipe.

Conversion Danfoss BFP ➨ BFP Service

BFP – standard pump			➨	Relevant Danfoss types		
Type	Code no.	1-2 pipe	➨	Type	Code no.	Comments/accessories
BFP 21 R5	071N0159	1	➨	BFP 21 R5	071N7173[2)]	
BFP 41 L3	071N0160	1	➨	BFP 41 L3	071N7174[2)]	
BFP 20 L3	071N0161	1	➨	BFP 20 L3	071N7168[2)]	
BFP 20 R3	071N0162	1	➨	BFP 20 R3	071N7169[2)]	
BFP 11 R5	071N0163	2	➨	BFP 21 R5	071N7173	
BFP 21 L3	071N0164	2	➨	BFP 21 L3	071N7170	
BFP 11 R5	071N0165	2	➨	BFP 21 R5	071N7173	
BFP 10 R5	071N0166	2	➨	BFP 20 R5	071N7129	
BFP 21 R3	071N0167	2	➨	BFP 21 R3	071N7171	
BFP 20 L3	071N0168	2	➨	BFP 20 L3	071N7168	
BFP 20 R3	071N0169	2	➨	BFP 20 R3	071N7169	
BFP 21 L3	071N0170	2	➨	BFP 21 L3	071N7170	
BFP 21 R3	071N0171	2	➨	BFP 21 R3	071N7171	
BFP 21 L5	071N0172	2	➨	BFP 21 L5	071N7172	
BFP 21 R5	071N0173	2	➨	BFP 21 R5	071N7173	
BFP 41 L3	071N0174	2	➨	BFP 41 L3	071N7174	
BFP 21 L3	071N0175	1	➨	BFP 21 L3	071N7170[2)]	
BFP 21 L3	071N0176	1	➨	BFP 21 L3	071N7170[2)]	+ coil: 071N0061
BFP 10 R3	071N0177	2	➨	BFP 10 R3	071N7253	
BFP 11 L5	071N0178	2	➨	BFP 21 L5	071N7172	
BFP 21 L3	071N0179	2	➨	BFP 21 L3	071N7170	
BFP 20 R5	071N0180	2	➨	BFP 20 R5	071N7129	
BFP 11 R3	071N0181	2	➨	BFP 11 R3	071N7155[3)]	
BFP 21 L3	071N0182	2	➨	BFP 21 L3	071N7170	
BFP 11 R3	071N0183	2	➨	BFP 11 R3	071N7155[3)]	
BFP 21 L3	071N0184	2	➨	BFP 21 L3	071N7170	
BFP 21 L3	071N0185	2	➨	BFP 21 L3	071N7170	

2) This pump is delivered for 2-pipe operation. A changeover to 1-pipe operation is possible, see Changeover 1 - 2 pipe.
3) This pump is delivered for 1-pipe operation. A changeover to 2-pipe operation is possible, see Changeover 1 - 2 pipe.

Conversion Danfoss BFP ➨ BFP Service

BFP – standard pump			➨	Relevant Danfoss types		
Type	Code no.	1-2 pipe	➨	Type	Code no.	Comments/accessories
BFP 41 L3	071N0188	2	➨	BFP 41 L3	071N7174	
BFP 21 L3	071N0189	2	➨	BFP 21 L3	071N7170	+ coil: 071N0062
BFP 31 L3	071N0190	2	➨	BFP 21 L3	071N7170	
BFP 31 R3	071N0191	2	➨	BFP 21 R3	071N7171	
BFP 31 L3	071N0192	1	➨	BFP 21 L3	071N7170[2)]	
BFP 21 L3	071N0193	1	➨	BFP 21 L3	071N7170[2)]	
BFP 21 L5	071N0194	1	➨	BFP 21 L5	071N7172[2)]	
BFP 21 R5	071N0195	1	➨	BFP 21 R5	071N7173[2)]	
BFP 41 R3	071N0196	1	➨	BFP 41 R3	071N7137[2)]	
BFP 21 L3	071N0197	2	➨	BFP 21 L3	071N7170	
BFP 21 R3	071N0198	1	➨	BFP 21 R3	071N7171[2)]	
BFP 20 R3	071N0200	2	➨	BFP 20 R3	071N7169	
BFP 21 L5	071N0202	2	➨	BFP 21 L5	071N7172	
BFP 21 L3	071N0203	2	➨	BFP 21 L3	071N7170	
BFP 21 L3	071N0204	2	➨	BFP 21 L3	071N7170	
BFP 21 R5	071N0207	2	➨	BFP 21 R5	071N7173	
BFP 21 R3	071N0208	2	➨	BFP 21 R3	071N7171	
BFP 21 L3	071N0209	2	➨	BFP 21 L3	071N7170	
BFP 11 L3	071N0210	1	➨	BFP 11 L3	071N7141	
BFP 21 L4	071N0211	2	➨	BFP 21 L3	071N7170	+ coupling with single flat in hole (D-shaped)
BFP 20 L3	071N0212	2	➨	BFP 20 L3	071N7168	+ coupling with single flat in hole (D-shaped)
BFP 11 L3	071N0213	1	➨	BFP 11 L3	071N7141	
BFP 21 R3	071N0214	1	➨	BFP 21 R3	071N7171[2)]	
BFP 21 R3	071N0215	2	➨	BFP 21 R3	071N7171	071N0215 has G 1/8 in S+R
BFP 21 R5	071N0216	2	➨	BFP 21 R5	071N7173	
BFP 21 L3	071N0217	2	➨	BFP 21 L3	071N7170	
BFP 20 L3	071N0218	2	➨	BFP 20 L3	071N7168	
BFP 21 L4	071N0219	2	➨	BFP21 L3	071N7170	+ coupling with single flat in hole (D-shaped)

2) This pump is delivered for 2-pipe operation. A changeover to 1-pipe operation is possible, see Changeover 1 - 2 pipe.
3) This pump is delivered for 1-pipe operation. A changeover to 2-pipe operation is possible, see Changeover 1 - 2 pipe.

Conversion Danfoss BFP ➡ BFP Service

BFP – standard pump			➡	Relevant Danfoss types		
Type	Code no.	1-2 pipe	➡	Type	Code no.	Comments/accessories
BFP 21 L3	071N0221	1	➡	BFP 21 L3	071N7170[2)]	
BFP 41 L3	071N0224	1	➡	BFP 41 L3	071N7174[2)]	
BFP 41 L3	071N0225	2	➡	BFP 41 L3	071N7174	
BFP 21 L3	071N0226	2	➡	BFP 21 L3	071N7170	
BFP 21 L5	071N0227	2	➡	BFP 21 L5	071N7172	+ coupling with single flat in hole (D-shaped)
BFP 21 L3	071N0228	2	➡	BFP 21 L3	071N7170	
BFP 20 R3	071N0229	2	➡	BFP 20 R3	071N7169	
BFP 21 R3	071N0230	2	➡	BFP 21 R3	071N7171	
BFP 21 R3	071N0231	1	➡	BFP 21 R3	071N7171[2)]	
BFP 21 L3	071N0232	1	➡	BFP 21 L3	071N7170[2)]	
BFP 21 L3 LE-S	071N0233	2	➡	BFP 21 L3 LE-S	071N3225	+ coupling with single flat in hole (D-shaped)
BFP 21 L5 LE-S	071N0234	2	➡	BFP 21 L5 LE-S	071N3136	Use the coupling included
BFP 41 R3	071N0235	2	➡	BFP 41 R3	071N7137	
BFP 21 L3	071N0236	2	➡	BFP 21 L3	071N7170	Old pump is with 1/8" RG in S+R
BFPC-21 L5	071N0237	2	➡	BFP 21 L5	071N7172	
BFPC-21 L3	071N0238	2	➡	BFP 21 L3	071N7170	
BFP21 L3 LE-S	071N0239	2	➡	BFP21 L3 LE-S	071N3225	Old pump is with 1/8" RG in S+R
BFPC-21 L3	071N0240	1	➡	BFP 21 L3	071N7170[2)]	
BFPC-21 L3	071N0241	1	➡	BFP 21 L3	071N7170[2)]	+ 24 V a.c. coil 071N0062
BFPC-21 L3	071N0242	2	➡	BFP 21 L3	071N7170	
BFPC-21 L3	071N0243	2	➡	BFP 21 L3	071N7170	+ 24 V a.c. coil 071N0062
BFPC-21 R3	071N0245	2	➡	BFP 21 R3	071N7171	
BFPC-21 R5	071N0248	2	➡	BFP 21 R5	071N7173	
BFP 21 L3	071N0250	2	➡	BFP 21 L3	071N7170	
BFP 21 L3	071N0251	2	➡	BFP 21 L3	071N7170	
BFP 21 L3	071N0252	1	➡	BFP 21 L3	071N7170	
BFP 10 R3	071N0253	1	➡	BFP 10 R3	071N7253	
BFP 21 R3	071N0254	2	➡	BFP 21 R3	071N7171	
BFP 21 R3	071N0255	2	➡	BFP 21 R3	071N7171	

2) This pump is delivered for 2-pipe operation. A changeover to 1-pipe operation is possible, see Changeover 1 - 2 pipe.

Conversion Danfoss BFP ➨ BFP Service

BFP – standard pump			➨	Relevant Danfoss types		
Type	Code no.	1-2 pipe	➨	Type	Code no.	Comments/accessories
BFP 21 R3	071N0256	1	➨	BFP 21 R3	071N7171[2)]	
BFP 21 L5	071N0257	2	➨	BFP 21 L5	071N7172	
BFP 21 L5	071N0258	2	➨	BFP 21 L5	071N7172	
BFP 21 R5	071N0259	2	➨	BFP 21 R5	071N7173	
BFP 21 R5	071N0260	2	➨	BFP 21 R5	071N7173	
BFP 21 L4	071N0261	2	➨	BFP 21 L3	071N7170	+ coupling with single flat in hole (D-shaped)
BFP 41 L3 LE-S	071N0262	2	➨	BFP 41 L3 LE-S	071N3137	
BFP 20 L5	071N0263	2	➨	BFP 20 L5	071N7126	
BFP 21 L3 LE-S	071N0264	2	➨	BFP 21 L3 LE-S	071N3225	
BFP 20 L3	071N0267	2	➨	BFP 20 L3	071N7168	
BFP 21 L5	071N0268	1	➨	BFP 21 L5	071N7172[2)]	100 V a.c.
BFP 21 L5	071N0269	1	➨	BFP 21 L5	071N7172[2)]	100 V a.c.
BFP 11 L6	071N0270	2	➨	BFP 21 L5	071N7172	Max. 40 l/h at 10 bar
BFP 11 R6	071N0271	2	➨	BFP 21 R5	071N7173	
BFP 10 L6	071N0272	2	➨	BFP 20 L5	071N7126	
BFP 10 R6	071N0273	2	➨	BFP 20 R5	071N7129	
BFP 11 L6	071N0274	1	➨	BFP 21 L5	071N7172[2)]	
BFP 11 R6	071N0275	1	➨	BFP 21 R5	071N7173[2)]	
BFPC-21 R3	071N0279	1	➨	BFP 21 R3	071N7171[2)]	+ 24 V a.c. coil 071N0062
BFPC-21 R3	071N0280	2	➨	BFP 21 R3	071N7171	
BFPC-21 R5	071N0281	2	➨	BFP 21 R5	071N7173	
BFPC-21 L3	071N0282	1	➨	BFP 21 L3	071N7170[2)]	Old coil might be usable
BFPC-21 R3	071N0283	1	➨	BFP 21 R3	071N7171[2)]	Old coil might be usable
BFPC-21 L3	071N0284	2	➨	BFP 21 L3	071N7170	Old coil might be usable
BFPC-21 R3	071N0285	2	➨	BFP 21 R3	071N7171	+ 24 V a.c. coil 071N0062
BFPC-21 R3	071N0286	2	➨	BFP 21 R3	071N7171	+ 24 V a.c. coil 071N0062
BFPC-21 R3	071N0287	2	➨	BFP 21 R3	071N7171	+ 24 V a.c. coil 071N0062
BFP 10 R3	071N0288	1	➨	BFP 10 R3	071N7253	
BFPC-21 L3	071N0289	1	➨	BFP 21 L3	071N7170[2)]	Old coil might be usable

2) This pump is delivered for 2-pipe operation. A changeover to 1-pipe operation is possible, see Changeover 1 - 2 pipe.

Conversion Danfoss BFP ➨ BFP Service

BFP – standard pump			➨	Relevant Danfoss types		
Type	Code no.	1-2 pipe	➨	Type	Code no.	Comments/accessories
BFP 21 L4	071N0291	2	➨	BFP 21 L3	071N7170	+ coupling with single flat in hole (D-shaped)
BFP 21 L5	071N0292	2	➨	BFP 21 L5	071N7172	+ coupling with single flat in hole (D-shaped)
BFP 21 L3	071N0295	2	➨	BFP 21 L3	071N7170	
BFP 20 R3	071N0298	1	➨	BFP 20 R3	071N7169[2)]	
BFP 21 L5	071N0299	2	➨	BFP 21 L5	071N7172	200 V a.c.
BFP 21 L3	071N1107	2	➨	BFP 21 L3	071N7170	
BFP 11 R3	071N1108	2	➨	BFP 11 R3	071N7155[3)]	
BFP 21 R3	071N1109	2	➨	BFP 21 R3	071N7171	
BFP 21 R5	071N1173	2	➨	BFP 21 R5	071N7173	
BFP 21 L3	071N1175	2	➨	BFP 21 L3	071N7170	
BFP 41 L3	071N1196	2	➨	BFP 41 L3	071N7174	
BFP 21 L3 LE-S	071N1199	2	➨	BFP 21 L3 LE-S	071N3225	
BFP 21 L3	071N1200	2	➨	BFP 21 L3	071N7170	
BFP 31 L3	071N1201	2	➨	BFP 21 L3	071N7170	
BFP 31 L3	071N1203	2	➨	BFP 21 L3	071N7170	
BFP 41 L3	071N1206	2	➨	BFP 41 L3	071N7174	
BFP 21 R5	071N1207	2	➨	BFP 21 R5	071N7173	
BFP 21 R3	071N1208	2	➨	BFP 21 R3	071N7171	
BFP 31 L3	071N1209	2	➨	BFP 21 L3	071N7170	
BFP 21 L3 LE-S	071N1211	2	➨	BFP 21 L3 LE-S	071N3225	+ coupling with single flat in hole (D-shaped)
BFP 41 L3	071N1213	1	➨	BFP 41 L3	071N7174[2)]	
BFP 21 L3	071N1214	1	➨	BFP 21 L3	071N7170[2)]	
BFP 21 R3	071N1215	1	➨	BFP 21 R3	071N7171[2)]	
BFP 21 L3	071N1216	2	➨	BFP 21 L3	071N7170	
BFP 21 L3	071N1217	2	➨	BFP 21 L3	071N7170	+ coupling with single flat in hole (D-shaped)
BFP 21 L3	071N1219	2	➨	BFP 21 L3	071N7170	+ coupling with single flat in hole (D-shaped)
BFP 20 L3	071N1220	2	➨	BFP 20 L3	071N7168	
BFA 01 L3	071N1221	2	➨	BFP 21 L3	071N7170	
BFA 01 R3	071N1223	2	➨	BFP 21 R3	071N7171	

2) This pump is delivered for 2-pipe operation. A changeover to 1-pipe operation is possible, see Changeover 1 - 2 pipe.
3) This pump is delivered for 1-pipe operation. A changeover to 2-pipe operation is possible, see Changeover 1 - 2 pipe.

Conversion Danfoss BFP ➨ BFP Service

BFP – standard pump			➨	Relevant Danfoss types		
Type	Code no.	1-2 pipe	➨	Type	Code no.	Comments/accessories
BFA 01 R3	071N1224	1	➨	BFP 21 R3	071N7171 2)	
BFA 01 L3	071N1225	2	➨	BFP 21 L3	071N7170	+ 24 V a.c. coil 071N0062
BFA 01 L3	071N1226	2	➨	BFP 21 L3	071N7170	
BFA 00 L3	071N1227	2	➨	BFP 20 L3	071N7168	
BFA 01 L3	071N1228	1	➨	BFP 21 L3	071N7170 2)	
BFA 01 L3	071N1229	2	➨	BFP 21 L3	071N7170	+ 110 V a.c. coil 071N0061
BFA 01 R3	071N1230	1	➨	BFP 21 R3	071N7171 2)	+ 24 V a.c. coil 071N0062
BFA 01 R3	071N1231	2	➨	BFP 21 R3	071N7171	+ 24 V a.c. coil 071N0062
BFA 01 R5	071N1232	2	➨	BFP 21 R5	071N7173	
BFA 01 R5	071N1233	2	➨	BFP 21 R5	071N7173	+ 110 V a.c. coil 071N0061
BFA 00 R5	071N1234	2	➨	BFP 20 R5	071N7129	
BFA 01 R3	071N1235	1	➨	BFP 21 R3	071N7171 2)	
BFA 01 L3	071N1236	2	➨	BFP 21 L3	071N7170	+ 24 V a.c. coil 071N0062
BFP 20 L3	071N1237	2	➨	BFP 20 L3	071N7168	
BFPC 21 L3	071N1238	1	➨	BFP 21 L3	071N7170 2)	Old coil might be usable
BFPC 21 L3	071N1239	2	➨	BFP 21 L3	071N7170	Old coil might be usable
BFA 01 R3	071N1240	2	➨	BFP 21 R3	071N7171	+ 110 V a.c. coil 071N0061
BFA 01 L3	071N1241	2	➨	BFP 21 L3	071N7170	+ 24 V a.c. coil 071N0008 and valve 071N0007
BFP 52E L3 LE-S	071N1244	2	➨	BFP 52E L3 LE-S	071N3214	
BFPC 21 R3	071N1245	1	➨	BFP 21 R3	071N7171 2)	
BFP 21 R5	071N1247	1	➨	BFP 21 R5	071N7173 2)	200 V a.c.
BFP 21 L3	071N1249	2	➨	BFP 21 L3	071N7170	+ 110 V a.c. coil 071N0061
BFP 21 L3	071N1250	2	➨	BFP 21 L3	071N7170	+ 24 V a.c. coil 071N0062
BFP 21 L3	071N1251	2	➨	BFP 21 L3	071N7170	+ 24 V a.c. coil 071N0062
BFP 21 R3	071N1254	2	➨	BFP 21 R3	071N7171	+ 24 V a.c. coil 071N0062
BFP 52E L3 LE-S	071N1259	2	➨	BFP 52E L3 LE-S	071N3214	
BFP 21 L5	071N1260	2	➨	BFP 21 L5	071N7172	+ coupling with single flat in hole (D-shaped)
BFA 01 R3	071N1262	2	➨	BFP 21 R3	071N7171	+ 24 V a.c. coil 071N0062
BFA 01 R3	071N1263	2	➨	BFP 21 R3	071N7171	

2) This pump is delivered for 2-pipe operation. A changeover to 1-pipe operation is possible, see Changeover 1 - 2 pipe.

Conversion Danfoss BFP ➨ BFP Service

BFP – standard pump			➨	Relevant Danfoss types		
Type	Code no.	1-2 pipe	➨	Type	Code no.	Comments/accessories
BFA 01 R3	071N1264	2	➨	BFP 21 R3	071N7171	+ 110 V a.c. coil 071N0061
BFA 01 R3	071N1265	2	➨	BFP 21 R3	071N7171	
BFP 21 L5	071N1266	2	➨	BFP 21 L5	071N7172	
BFP 21 L5	071N1267	1	➨	BFP 21 L5	071N7172[2)]	100 V a.c.
BFP 21 L5	071N1268	2	➨	BFP 21 L5	071N7172	
BFP 21 L5	071N1269	1	➨	BFP 21 L5	071N7172[2)]	
BFA 01 L3	071N1277	2	➨	BFP 21 L3	071N7170	Old coil might be usable
BFA 01 L3	071N1279	2	➨	BFP 21 L3	071N7170	Old fittings must be used
BFP 20 R5	071N1281	2	➨	BFP 20 R5	071N7129	
BFPC 21 R5	071N1282	2	➨	BFP 21 R5	071N7173	
BFPC 21 R3	071N1283	2	➨	BFP 21 R3	071N7171	
BFA 01 R4	071N1284	1	➨	BFP 21 R5	071N7173[2)]	
BFA 01 R4	071N1285	2	➨	BFP 21 R5	071N7173	
BFA 01 R3	071N1286	1	➨	BFP 21 L3	071N7170[2)]	
BFA 01 R5	071N1287	2	➨	BFP 21 R5	071N7173	+ 110 V a.c. coil 071N0061
BFA 01 R5	071N1288	2	➨	BFP 21 R5	071N7173	
BFA 01 L4	071N1289	2	➨	BFP 21 L5	071N7172	+ 24 V a.c. coil 071N0062
BFA 01 L3	071N1290	2	➨	BFP 21 L3	071N7170	
BFA 01 L3	071N1291	2	➨	BFP 21 L3	071N7170	
BFA 01 R3	071N1292	2	➨	BFP 21 R5	071N7173	
BFP 01 R5	071N1293	2	➨	BFP 21 R5	071N7173	
BFA 01 R5	071N1294	1	➨	BFP 21 R5	071N7173[2)]	
BFA 01 R5	071N1295	1	➨	BFP 21 R5	071N7173[2)]	
BFA 01 L3	071N1296	1	➨	BFP 21 L3	071N7170[2)]	
BFA 01 R3	071N1298	2	➨	BFP 21 R3	071N7171	
BFA 01 R3	071N1299	1	➨	BFP 21 R3	071N7171[2)]	
BFP 21L3 LE	071N2103	2	➨	BFP 21 L3 LE	071N3119	
BFP 21L3 LE	071N2104	2	➨	BFP 21 L3 LE	071N3119	
BFP 21L3 LE	071N2105	2	➨	BFP 21 L3 LE	071N3118	+ coupling with single flat in hole (D-shaped)

2) This pump is delivered for 2-pipe operation. A changeover to 1-pipe operation is possible, see Changeover 1 - 2 pipe.

Conversion Danfoss BFP ➨ BFP Service

BFP – standard pump			➨	Relevant Danfoss types		
Type	Code no.	1-2 pipe	➨	Type	Code no.	Comments/accessories
BFP 21R3-LE	071N2107	2	➨		No repl.	
BFP 21L3 LE	071N2108	2	➨	BFP 21 L3 LE	071N3119	
BFP 21 R3	071N2109	2	➨	BFP 21 R3	071N7171	
BFP 21L3 LE	071N2110	2	➨	BFP 21 L3 LE	071N3118	
BFP 21L4	071N2111	2	➨	BFP 21 L3	071N7170	+ coupling with single flat in hole (D-shaped)
BFP 21L3 LE	071N2112	2	➨	BFP 21 L3 LE	071N3119	+ coupling with single flat in hole (D-shaped)
BFP 21L3 LE	071N2113	2	➨	BFP 21 L3 LE	071N3119	
BFP 21L3 LE	071N2114	2	➨	BFP 21 L3 LE	071N3119	
BFP 21L3 LE-S	071N2115	2	➨	BFP 21L3 LE-S	071N3225	
BFP 21L3 LE-S	071N2116	2	➨	BFP 21 L3 LE-S	071N3225	
BFP 21 R3	071N2117	2	➨	BFP 21 R3	071N7171	
BFP 21 L3 LE	071N2118	2	➨	BFP 21 L3 LE	071N3118	
BFP 21 L3 LE	071N2119	2	➨	BFP 21 L3 LE	071N3119	
BFP 21 R5	071N2121	1	➨	BFP 21 R5	071N7173	Old coil might be usable
BFP 21 L3 LE-S	071N2122	2	➨	BFP 21 L3 LE-S	071N3225	
BFP 21 L2	071N2123	2	➨	BFP 21 L3	071N7170	Old pump is with 1/8" RG in ports.
BFP 21 L3 LE	071N2124	2	➨	BFP 21 L3 LE	071N3118	
BFP 21 L3 LE-S	071N2125	2	➨	BFP 21 L3 LE-S	071N3225	
BFP 21 R3 LE-S	071N2127	2	➨		No repl.	
BFP 21 L3 LE-S	071N2128	2	➨	BFP 21 L3 LE-S	071N3225	
BFP 21 R5	071N2129	2	➨	BFP 21 R5	071N7173	
BFP 21 L3 L2	071N2130	2	➨	BFP 21 L3	071N7170	
BFP 21 L5 LE-S	071N2131	2	➨	BFP 21 L5 LE-S	071N3136	Don't use the coupling included
BFP 21 L3 L2	071N2132	2	➨	BFP 21 L3	071N7170	
BFP 21 L3 LE	071N2135	1	➨	BFP 21 L3 LE	071N3119[2)]	071N007 + 071N008
BFP 21 L5 LE-S	071N2136	2	➨	BFP 21 L5 LE-S	071N3136	
BFP 41 L3 LE-S	071N2137	2	➨	BFP 41 L3 LE-S	071N3137	
BFPC 21 L5	071N2151	2	➨	BFP 21 L5	071N7172	
BFP 21 L5	071N2172	2	➨	BFP 21 L5	071N7172	
BFP 31 L5	071N2173	2	➨	BFP 21 L5	071N7172	

2) This pump is delivered for 2-pipe operation. A changeover to 1-pipe operation is possible, see Changeover 1 - 2 pipe.

Conversion Danfoss BFP ➨ BFP Service

BFP – standard pump			➨	Relevant Danfoss types		
Type	Code no.	1-2 pipe	➨	Type	Code no.	Comments/accessories
BFP 21 L3	071N2174	2	➨	BFP21 L3	071N7170	
BFP 52E L3	071N2201	2	➨	BFP 52E L3	071N3201	
BFP 52E L5	071N2202	2	➨	BFP 52E L5	071N3202	
BFP 52E R3	071N2203	2	➨	BFP 52E R3	071N3203	
BFP 52E R5	071N2204	2	➨	BFP 52E R5	071N3204	
BFP 52E L5	071N2205	2	➨	BFP 52E L5	071N3202	
BFP 52E R5	071N2206	2	➨	BFP 52E R5	071N3204	
BFP 52E R5	071N2207	2	➨		No repl.	
BFP 52E L3	071N2209	2	➨	BFP 52E L3	071N3201	
BFP 52E L3	071N2211	2	➨	BFP 52E L3	071N3201	+ coupling with single flat in hole (D-shaped)
BFP 52E L5	071N2212	2	➨	BFP 52E L5	071N3202	+ coupling with single flat in hole (D-shaped)
BFP 52E L3 LE-S	071N2213	2	➨	BFP 52E L3 LE-S	071N3213	
BFP 52E L3 LE-S	071N2214	2	➨	BFP 52E L3 LE-S	071N3214	
BFP 52E L3 LE-S	071N2215	2	➨	BFP 52E L3 LE-S	071N3215	
BFP 52E L5	071N2216	2	➨	BFP 52E L3	071N3202	+ coupling with single flat in hole (D-shaped)
BFP 52E L5	071N2217	1	➨	BFP 52E L5	071N3202[2)]	
BFP 52E L5	071N2220	2	➨	BFP 52E L5	071N3202	+ coupling with single flat in hole (D-shaped)
BFP 52E L3 LE-S	071N2222	2	➨	BFP 52E L3 LE-S	071N3214	
BFP 21 L3 LE-S	071N2225	2	➨	BFP 21 L3 LE-S	071N3225	
BFP 20 L5	071N2235	2	➨	BFP 20 L5	071N7126	
BFPC 21 L3	071N2242	2	➨	BFP 21 L3	071N7170	
BFP 21 R5	071N2248	2	➨	BFP 21 R5	071N7173	
BFP 21 L3	071N2250	2	➨	BFP 21 L3	071N7170	
BFP 52E L3	071N2251	2	➨	BFP 52E L3	071N3201	
BFP 52E L5	071N2252	2	➨	BFP 52E L5	071N3202	
BFP 52E R3	071N2253	2	➨	BFP 52E R3	071N3203	
BFP 52E R5	071N2254	2	➨	BFP 52E R5	071N3204	
BFP 21 R3	071N2255	2	➨	BFP 21 R3	071N7171	
BFP 52E R5	071N2256	2	➨	BFP 52E R5	071N3204	

2) This pump is delivered for 2-pipe operation. A changeover to 1-pipe operation is possible, see Changeover 1 - 2 pipe.

Conversion Danfoss BFP ➨ BFP Service

BFP – standard pump			➨	Relevant Danfoss types		
Type	Code no.	1-2 pipe	➨	Type	Code no.	Comments/accessories
BFP 52E L3	071N2264	2	➨	BFP 52E L3	071N3201	
BFP 52E L5	071N2265	2	➨	BFP 52E L5	071N3202	
BFP 52E R3	071N2273	2	➨	BFP 52E R3	071N3203	
BFP 52E L3 LE-S	071N2274	2	➨	BFP 52E L3 LE-S	071N3214	
BFP 52E L3 LE-S	071N2275	2	➨	BFP 52E L3 LE-S	071N3214	
BFP 52E L3 LE-S	071N2276	2	➨	BFP 52E L3 LE-S	071N3214	
BFP 52E L3 LE-S	071N2277	2	➨	BFP 52E L3 LE-S	071N3214	
BFPC 21 R3	071N2280	2	➨	BFP 21 R3	071N7171	
BFP 52E L3	071N2281	2	➨	BFP 52E L3	071N3201	
BFP 52E R3	071N2283	2	➨	BFP 52E R3	071N3203	
BFP 52E R5	071N2284	2	➨	BFP 52E R5	071N3204	
BFP 21 L3 LE	071N2285	2	➨	BFP 21 L3 LE	071N3118	
BFP 52E L3	071N2286	2	➨		No repl.	
BFP 52E L3 LE-S	071N2288	2	➨	BFP 52E L3 LE-S	071N3215	
BFP 52E L3	071N2291	2	➨	BFP 52E L3	071N3201	+ coupling with single flat in hole (D-shaped)
BFP 52E L3 LE-S	071N2293	2	➨	BFP 52E L3 LE-S	071N3215	
BFP 52E L3	071N2295	2	➨	BFP 52E L3	071N3201	
BFP 52E L3 LE-S	071N2296	2	➨	BFP 52E L3 LE-S	071N3213	+ coupling with single flat (D-shaped)
BFP 52E L3	071N2299	2	➨	BFP 52E L3	No repl.	
BFP 52E L3 LE-S	071N2301	2	➨	BFP 52E L3 LE-S	071N3213	
BFP 52E L5	071N2302	2	➨	BFP 52E L5	071N3202	
BFP 21 L3 LE-S	071N2303	2	➨	BFP 21 L3 LE-S	071N3225	+ coupling with single flat in hole (D-shaped)
BFP 21 L3	071N2304	2	➨	BFP 21 L3	071N7170	+ coupling with single flat in hole (D-shaped)
BFP 21 L3	071N2305	1	➨	BFP 21 L3	071N7170[2)]	
BFP 21 R5	071N2335	2	➨	BFP 21 R5	071N7173	
BFP 21 R3	071N2336	2	➨	BFP 21 R3	071N7171	
BFPC 21 R3	071N2380	1	➨	BFP 21 R3	071N7171[2)]	
BFPC 21 R5	071N2381	2	➨	BFP 21 R5	071N7173	
BFP 21 L3 LE	071N3118	2	➨	BFP 21 L3 LE	071N3118	

2) This pump is delivered for 2-pipe operation. A changeover to 1-pipe operation is possible, see Changeover 1 - 2 pipe.

Conversion Danfoss BFP ➨ BFP Service

BFP – standard pump			➨	Relevant Danfoss types		
Type	Code no.	1-2 pipe	➨	Type	Code no.	Comments/accessories
BFP 21 L3 LE	071N3119	2	➨	BFP 21 L3 LE	071N3119	
BFP 21 L5 LE-S	071N3136	2	➨	BFP 21 L5 LE-S	071N3136	
BFP 41 L3 LE-S	071N3137	2	➨	BFP 41 L3 LE-S	071N3137	
BFP 52E L3	071N3201	2	➨	BFP 52E L3	071N3201	
BFP 52E L5	071N3202	2	➨	BFP 52E L5	071N3202	
BFP 52E R3	071N3203	2	➨	BFP 52E R3	071N3203	
BFP 52E R5	071N3204	2	➨	BFP 52E R5	071N3204	
BFP 52E L3 LE-S	071N3213	2	➨	BFP 52E L3 LE-S	071N3213	
BFP 52E L3 LE-S	071N3214	2	➨	BFP 52E L3 LE-S	071N3214	
BFP 52E L3 LE-S	071N3215	2	➨	BFP 52E L3 LE-S	071N3215	
BFP 21 L3 LE-S	071N3225	2	➨	BFP 21 L3 LE-S	071N3225	
BFP 21 L3 LE	071N4105	2	➨	BFP 21 L3 LE	071N3118	+ coupling with single flat in hole (D-shaped)
BFP 21 L3	071N4107	2	➨	BFP 21 L3	071N7170	
BFP 11 L3	071N4141	1	➨	BFP 11 L3	071N7141	
BFP 11 R3	071N4143	1	➨	BFP 11 R3	071N7155	
BFP 52E L3 LE-S	071N4222	2	➨	BFP 52E L3 LE-S	071N3215	
BFP 11 L13	071N6101	2	➨		No repl.	
BFP 11 R13	071N6102	2	➨		No repl.	
BFP 10 L13	071N6103	2	➨		No repl.	
BFP 10 R13	071N6104	2	➨		No repl.	
BFP 11 L11	071N6105	2	➨		No repl.	
BFP 11 R11	071N6106	2	➨		No repl.	
BFP 10 L11	071N6107	2	➨		No repl.	
BFP 10 R11	071N6108	2	➨		No repl.	
BFP 11 L8	071N6109	2	➨		No repl.	
BFP 11 R8	071N6110	2	➨		No repl.	
BFP 10 L8	071N6111	2	➨		No repl.	
BFP 10 R8	071N6112	2	➨		No repl.	
BFP 12 L8	071N6201	2	➨		No repl.	

Conversion Danfoss BFP ➨ BFP Service

BFP – standard pump			➨	Relevant Danfoss types		
Type	Code no.	1-2 pipe	➨	Type	Code no.	Comments/accessories
BFP 12 L11	071N6202	2	➨		No repl.	
BFP 12 L13	071N6203	2	➨		No repl.	
BFP 51 L6	071N6204	2	➨		No repl.	
BFP 51 L11	071N6205	2	➨		No repl.	
BFP 52 L6	071N6206	2	➨	BFP 52 E L5	071N3202	Max. 40 l/h at 10 bar
BFP 52 L8	071N6207	2	➨		No repl.	
BFP 52 L11	071N6209	2	➨		No repl.	
BFP 52 R11	071N6210	2	➨		No repl.	
BFP 52 L13	071N6211	2	➨		No repl.	
BFP 52 R13	071N6212	2	➨		No repl.	
BFP 53 L6	071N6213	2	➨		No repl.	
BFP 12 R11	071N6214	2	➨		No repl.	
BFP 53 L11	071N6216	2	➨		No repl.	
BFP 12 L6	071N6217	2	➨		No repl.	
BFP 12 R6	071N6218	2	➨		No repl.	
BFP 12 R8	071N6219	2	➨		No repl.	
BFP 12 R13	071N6220	2	➨		No repl.	
BFP 51 R6	071N6221	2	➨		No repl.	
BFP 51 L8	071N6222	2	➨		No repl.	
BFP 51 R8	071N6223	2	➨		No repl.	
BFP 51 R11	071N6224	2	➨		No repl.	
BFP 51 L13	071N6225	2	➨		No repl.	
BFP 51 R13	071N6226	2	➨		No repl.	
BFP 52 R6	071N6227	2	➨	BFP 52 E R5	071N3204	Max. 40 l/h at 10 bar
BFP 53 R6	071N6228	2	➨		No repl.	
BFP 53 L8	071N6229	2	➨		No repl.	
BFP 53 R8	071N6230	2	➨		No repl.	
BFP 53 R11	071N6231	2	➨		No repl.	

2) This pump is delivered for 2-pipe operation. A changeover to 1-pipe operation is possible, see Changeover 1 - 2 pipe.

Conversion Danfoss BFP ➨ BFP Service

BFP – standard pump			➨	Relevant Danfoss types		
Type	Code no.	1-2 pipe	➨	Type	Code no.	Comments/accessories
BFP 53 L13	071N6232	2	➨		No repl.	
BFP 53 R13	071N6233	2	➨		No repl.	
BFP 20 L5	071N7126	2	➨	BFP 20 L5	071N7126	
BFP 20 R5	071N7129	2	➨	BFP 20 R5	071N7129	
BFP 41 R3	071N7137	2	➨	BFP 41 R3	071N7137	
BFP 11 L3	071N7141	1	➨	BFP 11 L3	071N7141	
BFP 11 R3	071N7155	1	➨	BFP 11 R3	071N7155	
BFP 21 L3	071N7156	1	➨	BFP 21 L3	071N7170[2)]	
BFP 21 R3	071N7157	1	➨	BFP 21 R3	071N7171[2)]	
BFP 20 L3	071N7168	2	➨	BFP 20 L3	071N7168	
BFP 20 R3	071N7169	2	➨	BFP 20 R3	071N7169	
BFP 21 L3	071N7170	2	➨	BFP 21 L3	071N7170	
BFP 21 R3	071N7171	2	➨	BFP 21 R3	071N7171	
BFP 21 L5	071N7172	2	➨	BFP 21 L5	071N7172	
BFP 21 R5	071N7173	2	➨	BFP 21 R5	071N7173	
BFP 41 L3	071N7174	2	➨	BFP 41 L3	071N7174	
BFP 10 R3	071N7253	1	➨	BFP 10 R3	071N7253	
BFP 41 L3	071N8213	1	➨	BFP 41 L3	071N7174[2)]	
BFP 21 L3	071N8214	1	➨	BFP 21 L3	071N7170[2)]	
BFP 21 R3	071N8215	1	➨	BFP 21 R3	071N7171[2)]	

2) This pump is delivered for 2-pipe operation. A changeover to 1-pipe operation is possible, see Changeover 1 - 2 pipe.

Conversion Suntec ➨ BFP Service

Suntec			➨	Danfoss oil pumps		
Type	Code no.	1-2 pipe	➨	Type	Code no.	Comments/accessories
AN47A	13261P	2	➨	BFP 20 R3	071N7169	
AN47D	13391P	2	➨	BFP 20 L3	071N7168	
AN47C	13421P	2	➨	BFP 20 L3	071N7168	
AN47B	13951P	2	➨	BFP 20 R3	071N7169	
AN47A	72163P	2	➨	BFP 20 R3	071N7169	
AN47B	72173P	2	➨	BFP 20 R3	071N7169	
AN47C	72183P	2	➨	BFP 20 L3	071N7168	
AN47D	72193P	2	➨	BFP 20 L3	071N7168	
AN47A	72263P	2	➨	BFP 20 R3	071N7169	+ flange and bush ∅54: 071N0047
AN47B	72273P	2	➨	BFP 20 R3	071N7169	
AN47C	72283P	2	➨	BFP 20 L3	071N7168	
AN47D	72293P	2	➨	BFP 20 L3	071N7168	
AN47C	72473M	1	➨	BFP 20 L3	071N7168[2)]	+ 071N0047, possible changeover to 1-pipe operation
AN47A	72832M	1	➨	BFP 20 R3	071N7169[2)]	
AN47A	73263P	2	➨	BFP 20 R3	071N7169	
AN47B	73273P	2	➨	BFP 20 R3	071N7169	
AN47C	73283P	2	➨	BFP 20 L3	071N7168	
AN47A	73443P	2	➨	BFP 20 R3	071N7169	
AN57B	13301P	2	➨	BFP 20 R5	071N7129	
AN57A	72433P	2	➨	BFP 20 R5	071N7129	
AN57C	72823P	2	➨	BFP 20 L5	071N7126	+ flange and bush ∅54: 071N0047 Suntec: 60 l/h, BFP: 40 l/h at 12 bar
AN57C	78823E6	2	➨	BFP 20 L5	071N7126	
AN67B	13351P	2	➨	BFP 20 R5	071N7129	
AN67C	13361P	2	➨		No repl.	
AN67D	13571P	2	➨		No repl.	
AN67B	13351P	2	➨		No repl.	
AN67C	13381P	2	➨		No repl.	

2) This pump is delivered for 2-pipe operation. A changeover to 1-pipe operation is possible, see Changeover 1 - 2 pipe.

Conversion Suntec ➨ BFP Service

Suntec			➨	Danfoss oil pumps		
Type	Code no.	1-2 pipe	➨	Type	Code no.	Comments/accessories
AN67C	84102 E1	2	➨		No repl.	
AN67C	72333 P	2	➨		No repl.	
AN67A	72383 P	2	➨		No repl.	
AN67C	72423 P	2	➨		No repl.	
AN67B	72513 P	2	➨		No repl.	
AN67D	72523 P	2	➨		No repl.	
AN67B	73353 P	2	➨		No repl.	
AN67A	73453 P	2	➨		No repl.	
AL35B	95202 P0200	2	➨	BFP 21 R3	071N7171	+ 24 V a.c. coil: 071N0062
AL35B	95202 P0500	2	➨	BFP 21 R3	071N7171	
AL35C	95212 P0500	2	➨	BFP 21 L3	071N7170	
AL35C	95242 M0500	1	➨	BFP 21 L3	071N7170[2)]	
AL35A	95262 P0500	2	➨	BFP 21 R3	071N7171	
AL35C	95282 P0500	2	➨	BFP 21 L3	071N7170	
AL35D	95292 P0200	2	➨	BFP 21 L3	071N7170	+ 24 V a.c. coil: 071N0062
AL35C	95402 P0500	2	➨	BFP 21 L3	071N7170	Suntec: G $^{1}/_{8}$ in S+R
AL35C	95652 M0500	1	➨	BFP 21 L3	071N7170[2)]	
AL35A	95702 P0500	2	➨	BFP 21 R3	071N7171	
AL35C	95782 P0500	2	➨	BFP 21 L3	071N7170	
AL35B	95802 P0500	2	➨	BFP 21 R3	071N7171	
AL35C	95402 P0500R	2	➨	BFP 21 L3	071N7170	

2) This pump is delivered for 2-pipe operation. A changeover to 1-pipe operation is possible, see Changeover 1 - 2 pipe.

Conversion Suntec ➨ BFP Service

Suntec			➨	Danfoss oil pumps		
Type	Code no.	1-2 pipe	➨	Type	Code no.	Comments/accessories
AL55B	95312 P0500	2	➨	BFP 21 R5	071N7173	
AL65C	-	2	➨		No repl.	
ALE V 30C	93004 P0700R	2	➨	BFP 21 L3 LE-S	071N3225	Old pump is with G1/8" in S+R
ALE 35C	93242 P0500	2	➨	BFP 21 L3-LE-S	071N3225	
AS47A	15361 P0500	2	➨	BFP 21 R3	071N7171	
AS47B	15371 P0500	2	➨	BFP 21 R3	071N7171	
AS47C	15381 P0500	2	➨	BFP 21 L3	071N7170	
AS47D	15391 P0500	2	➨	BFP 21 L3	071N7170	
AS47D	15501 P0500	2	➨	BFP 21 L3	071N7170	
AS47B	15511 P0500	2	➨	BFP 21 R3	071N7171	
AS47C	15541 P0500	2	➨	BFP 21 L3	071N7170	
AS47D	15571 P0500	2	➨	BFP 21 L3	071N7170	+ coupling with single flat in hole (D-shaped)
AS47D	15621 P0500	2	➨	BFP 21 L3	071N7170	
AS47D	15681 P0500	2	➨	BFP 21 L3	071N7170	
AS47C	15691 P0500	2	➨	BFP 21 L3	071N7170	
AS47D	15721 P0500	2	➨	BFP 21 L3	071N7170	
AS47D	15801 P0500	2	➨	BFP 21 L3	071N7170	
AS47A	74323 P0500	2	➨	BFP 21 R3	071N7171	
AS47C	74343 P0500	2	➨	BFP 21 L3	071N7170	
AS47D	74353 P0500	2	➨	BFP 21 L3	071N7170	
AS47A	74363 P0500	2	➨	BFP 21 R3	071N7171	
AS47C	74383 P0500	2	➨	BFP 21 L3	071N7170	+ flange and bush ∅54: 071N0047
AS47D	74393 P0500	2	➨	BFP 21 L3	071N7170	
AS47C	74443 P0500	2	➨	BFP 21 L3	071N7170	
AS47B	74453 P0500	2	➨	BFP 21 R3	071N7171	
AS47C	74513 M0500	1	➨	BFP 21 L3	071N7170[2)]	

2) This pump is delivered for 2-pipe operation. A changeover to 1-pipe operation is possible, see Changeover 1 - 2 pipe.

Conversion Suntec ➨ BFP Service

Suntec			➨	Danfoss oil pumps		
Type	Code no.	1-2 pipe	➨	Type	Code no.	Comments/accessories
AS47C	74613 P0500	2	➨	BFP 21 L3	071N7170	+ flange and bush ∅54: 071N0047
AS47C	75543 P0500	2	➨	BFP 21 L3	071N7170	
AS47D	75623 P0500	2	➨	BFP 21 L3	071N7170	
AS47A	75643 P0500	2	➨	BFP 21 R3	071N7171	
AS57C	15441 P0500	2	➨	BFP 21 L5	071N7172	
AS57C	74413 P0500	2	➨	BFP 21 L5	071N7172	+ flange and bush ∅54: 071N0047
AS57B	74423 P0500	2	➨	BFP 21 R5	071N7173	
AS57C	75443 P0500	2	➨	BFP 21 L5	071N7172	
AS67C			➨		No repl.	
AE45C	13601 P	2	➨	BFP 20 L5	071N7126	
AE45C	13701 M	1	➨	BFP 20 L5	071N7126[2)]	Suntec: 1/8 NPTF in nozzle outlet
AE47B	13661 P	2	➨	BFP 20 R5	071N7129	
AE47D	13781 M	1	➨	BFP 20 L5	071N7126[2)]	
AE47A	13841 M	1	➨	BFP 20 R5	071N7129[2)]	
AE47D	13851 P	2	➨	BFP 20 L5	071N7126	
AE47C	13861 P	2	➨	BFP 20 L5	071N7126	
AE47C	13871 P	2	➨	BFP 20 L5	071N7126	
AE47B	72673 P	2	➨	BFP 20 R5	071N7129	+ flange and bush ∅54: 071N0047
AE47C	72743 M	1	➨	BFP 20 L5	071N7126[2)]	+ flange and bush ∅54: 071N0047
AE47C	73683 P	2	➨	BFP 20 L5	071N7126	
AE57B	13641 M	1	➨	BFP 20 R5	071N7129[2)]	
AE57C	73733 P	2	➨	BFP 20 L5	071N7126	
AE67D	72783 P	2	➨		No repl.	
AE67C	73613 P	2	➨		No repl.	
AE77C	72702 P	2	➨		No repl.	
AE77C	73802 P	2	➨		No repl.	
AP47A	75553 P0500	2	➨		No repl.	
AP47C	75563 P0500	2	➨	BFP 52E L5	071N3202[4)]	
AP47B	75613 P0500	2	➨	BFP 52E R5	071N3204[4)]	
AP47C	74603 P0500	2	➨	BFP 52E L5	071N3202[4)]	+ flange and bush ∅54: 071N0047

2) This pump is delivered for 2-pipe operation. A changeover to 1-pipe operation is possible, see Changeover 1 - 2 pipe.

Conversion Suntec ➨ BFP Service

Suntec			➨	Danfoss oil pumps		
Type	Code no.	1-2 pipe	➨	Type	Code no.	Comments/accessories
AP57C	74433 P0500	2	➨	BFP 52E L5	071N3202[4)]	Suntec: 35 l/h, BFP: 26 l/h at 22 bar + 071N0047
AP57C	75453 P0500	2	➨	BFP 52E L5	071N3202[4)]	Suntec: 35 l/h, BFP: 26 l/h at 22 bar
AP57A	75493 P0500	2	➨	BFP 52E R5	071N3204[4)]	
AP67C	74583 P0500	2	➨	BFP 52E L5	071N3202[4)]	Suntec: 58 l/h, BFP: 26 l/h at 22 bar + 071N0047
AP67C	75593 P0500	2	➨	BFP 52E L5	071N3202[4)]	Suntec: 58 l/h, BFP: 26 l/h at 22 bar
AP245C	95541 P0500	2	➨	BFP 52E L5	071N3202[4)]	
AP245C	95601 P0500	2	➨	BFP 52E L5	071N3202[4)]	
AP345C	95101 P0500	2	➨		No repl.	
AT245C	95412 P0500	2	➨	BFP 52E L5	071N3202	
AT245D	95442 P0500	2	➨		No repl.	
AT245A	95472 P0500	2	➨		No repl.	Suntec: Nozzle outlet to the right
AT245D	95482 P0500	2	➨		No repl.	
AT255C	95492 P0500	2	➨	BFP 52E L5	071N3202	Suntec: 47 l/h, BFP: 26 l/h at 22 bar
AT255A	95522 P0500	2	➨		No repl.	Suntec: Nozzle outlet to the right
AT3....			➨		No repl.	Special pump
AT275C	95832 P0500	2	➨		No repl.	
AT355D	95642 P0500	2	➨		No repl.	Suntec: Nozzle outlet to the right
AT355C	9550	2	➨		No repl.	
A2L95D	97022 P0500	2	➨		No repl.	
AU47L	9853-6	2	➨	BFP 21 L3	071N7170	
AU47R	9852-6	2	➨	BFP 21 R3	071N7171	
AUV47L	9877-6P 0700	2	➨	BFP 21 L3 LE-S	071N3225	In case no LE nozzle or valve is used 071N7170 is to be used instead.
AUV47R	9876-6P 0700	2	➨	BFP 21R3	071N7170	In case LE nozzle or valve is used then there is no replacement
ATUV45L	9860-6P 0700	2	➨	BFP 52E L3 LE-S	071N3214	In case no LE nozzle or valve is used 071N3201 is to be used instead.
ATUV 45R	9861-6P 0700	2	➨	BFP 52E R3	071N3203	In case LE nozzle or valve is used then there is no replacement

4) The pump NC valve must be connected in parallel to the NC valve in nozzle line.

Conversion Eckerle ➡ BFP Service

Eckerle		➡	Danfoss oil pumps		
Old designation	New designation	➡	Type	Code no.	Comments/accessories
UNI 1.1 L5 L64W	UNI-E 2.1 L1 L64	➡	BFP 20 L3	071N7168	Eckerle: G 1/8 in S+R
UNI 1.2 L1 L64-50	UNI 2.12 L1 L64	➡	BFP 21 L3	071N7170	
UNI 1.2 L5 L14	UNI 2.12 L1 L14	➡	BFP 21 L3	071N7170	
UNI 1.2 L5 L64-M1	UNI-E 2.1 L1 L64-21	➡	BFP 21 L3	071N7170	Eckerle: G 1/8 in S+R
UNI 1.2 L5 L64-50	UNI 2.12 L1 L64	➡	BFP 21 L3	071N7170	
UNI 1.2 L5 M14-50	UNI 2.12 L1 M14	➡	BFP 21 L3	071N7170	
UNI 1.2 L5 M64-50-W	UNI 2.12 L1 M64-65	➡	BFP 21 L3	071N7170	Eckerle: G 1/8 in S+R
UNI 1.2 L62 M14-01-W	UNI 2.12 L6 M14-65	➡	BFP 21 L5	071N7172	BFP: Max. 40 l/h at 12 bar
UNI 1.2 L62 L14W		➡	BFP 21 L5	071N7172	BFP: Max. 40 l/h at 12 bar
UNI 1.42 L5 A64-W	UNI 2.42 L5 L64-65	➡	BFP 52E L5	071N3202	Eckerle: G 1/8 in S+R
UNI 1.42 L5 L64W		➡	BFP 52E L5	071N3202	Eckerle: Max. 75 l/h,
UNI 1.42 L6 L64W		➡	BFP 52E L5	071N3202	BFP: Max. 40 l/h at 12 bar
UNI 1.72 L62 L14-W	UNI 2.17 L6 M14-65	➡		No repl.	
UNI 2.1 L1 L40	UNI-E 2.1 L1 L10 (-22,-30)	➡	BFP 20 L3	071N7168	+ coupling with single flat in hole (D-shaped)
UNI 2.1 L1 L44	UNI-E 2.1 L1 L14	➡	BFP 20 L3	071N7168	
UNI 2.1 L1 L44H	UNI-E 2.1 L14	➡	BFP 20 L3	071N7168	
UNI 2.1 R1 L40	UNI-E 2.1 R1 L10	➡	BFP 20 R3	071N7169	+ coupling with single flat in hole (D-shaped)
UNI 2.1 R1 L44-21	UNI-E 2.1 R1 L14	➡	BFP 20 R3	071N7169	
UNI 2.1 L5 L40-21	UNI-E 2.1 L5 L10	➡	BFP 20 L5	071N7126	+ coupling with single flat in hole (D-shaped)
UNI 2.1 L5 L42	UNI-E 2.1 L5 L12	➡	BFP 20 L5	071N7126	+ coupling with single flat in hole (D-shaped) + 071B0011
UNI 2.1 L5 L44	UNI-E 2.1 L5 L14 (-13)	➡	BFP 20 L5	071N7126	
UNI 2.1 L5 L50	UNI-E 2.1 L5 L10	➡	BFP 20 L5	071N7126	Eckerle: 10-25 bar, BFP: Max. 20 bar + coupling with single flat in hole (D-shaped)
UNI 2.1 L5 R44	UNI-E 2.1 L5 R14 (-13)	➡	BFP 20 L5	071N7126	
UNI 2.1 L5 R94	UNI-E 2.1 L5 R74	➡	BFP 20 L5	071N7126	Eckerle: G 1/8 in S+R
UNI 2.1 R5 L42-UI-21	UNI-E 2.1 R5 L12-80	➡	BFP 20 R5	071N7129	+ coupling with single flat in hole (D-shaped)
UNI 2.1 R5 L43-UI-21	UNI-E 2.1 R5 L13-80	➡	BFP 20 R5	071N7129	+ flange: 071N0047
UNI 2.1 R5 L43		➡	BFP 20 R5	071N7129	

Conversion Eckerle ➨ BFP Service

Eckerle		➨	Danfoss oil pumps		
Old designation	New designation	➨	Type	Code no.	Comments/accessories
UNI 2.1 R5 L44	UNI-E 2.1 R5 L14	➨	BFP 20 R5	071N7129	
UNI 2.1 R5 L54	UNI-E 2.1 R5 L24	➨	BFP 20 R5	071N7129	Eckerle: Max. 25 bar
UNI 2.1 R5 R42		➨	BFP 20 R5	071N7129	
UNI 2.1 R5 R44	UNI-E 2.1 R5 R14	➨	BFP 20 R5	071N7129	
UNI 2.1 R5 R45-21	UNI-E 2.1 R5 R15	➨	BFP 20 R5	071N7129	+ bush: 071B0011
	UNI-E 2.1 R5 R60	➨	BFP 20 R5	071N7129	G 1/8 in S+R + coupling with single flat in hole (D-shaped)
UNI 2.1 R5 R80	UNI-E 2.1 R5 R40	➨	BFP 20 R5	071N7129	+ coupling with single flat in hole (D-shaped)
UNI 2.1 L6 L46	UNI-E 2.1 L6 L26	➨	RSA 40	070L3249	+ flange: 070N0211
UNI 2.1 L6 L46-S-W	UNI-E 2.1 L6 L16-11	➨	RSA 40	070L3249	
UNI 2.1 L6 L54	UNI-E 2.1 L6 L24	➨		No repl.	Eckerle ∅32, RSA ∅54 neck diameter
UNI 2.1 L6 L54-06	UNI-E 2.1 L6 L24	➨		No repl.	
UNI 2.1 R6 L25	UNI-E 2.1 R6 L25	➨	RSA 40	070-3249	
UNI 2.1 R6 R54	UNI-E 2.1 R6 L24	➨		No repl.	Eckerle ∅32, RSA ∅54 neck diameter
UNI 2.1 L7 L55	UNI-E 2.1 L7 L15	➨	RSA 60	070L3352	
UNI 2.1 L7 L55-05	UNI-E 2.1 L7 L25	➨	RSA 60	070L3352	Shaft: Eckerle ∅8, RSA ∅10
UNI 2.1 R7 L55	UNI-E 2.1 R7 L15	➨	RSA 60	070L3352	
UNI 2.1 G22 L1 L10/L40	UNI-E 2.1 G22	➨	BFP 20 L3	071N7168	+ coupling with single flat in hole (D-shaped)
	UNI-E 2.1 L1 L64 (-21)	➨	BFP 20 L3	071N7168	G 1/8 in S+R
	UNI-E 2.1 L5 R74	➨	BFP 20 L5	071N7172	
UNI 2.1 G41-21 L1 L10	UNI-E 2.1 G41	➨	BFP 20 L3	071N7168	
	UNI-E 2.1 G41-13	➨	BFP 20 L3	071N7168	+ coupling with single flat in hole (D-shaped)
	UNI- E 2.2 L1 L10	➨	BFP 21 L3	071N7170	
UNI 2.2 L1 L14	UNI-E 2.2 L1 L14	➨	BFP 21 L3	071N7170	
UNI 2.2 L1 L16W	UNI-E 2.2 L1 L16-10	➨	BFP 21 L3	071N7170	+ flange: 071N0047
UNI 2.2 L1 L44	UNI-E 2.2 L1 L14	➨	BFP 21 L3	071N7170	
UNI 2.2 L1 R14	UNI-E 2.2 L1 R14-12	➨	BFP 21 L3	071N7170	
UNI 2.2 R1 L40	UNI-E 2.2 R1 L10	➨	BFP 21 R3	071N7171	+ coupling with single flat in hole (D-shaped)
UNI 2.2 R1 M14	UNI-E 2.2 R1 M14	➨	BFP 21 R3	071N7171	

Conversion Eckerle ➨ BFP Service

Eckerle		➨	Danfoss oil pumps		
Old designation	New designation	➨	Type	Code no.	Comments/accessories
UNI 2.2 R1 R24	UNI-E 2.2 R1 R24	➨	BFP 21 R3	071N7171	Eckerle: Max. 25 bar
	UNI-E 2.2 R1 S14	➨	BFP 21 R3	071N7171	
UNI 2.2 L5 L14	UNI-E 2.2 L5 L14-92	➨	BFP 21 L5	071N7172	Eckerle: G 1/8 in S+R Eckerle: 10-25 bar, BFP: Max. 20 bar
UNI 2.2 L5 L15-21-05	UNI-E 2.2 L5 L15	➨	BFP 21 L5	071N7172	+ bush: 071B0011
UNI 2.2 L5 L40-X	UNI-E 2.2 L5 L10-50	➨	BFP 21 L5	071N7172	+ coupling with single flat in hole (D-shaped)
UNI 2.2 L5 L42	UNI-E 2.2 L5 L12	➨	BFP 21 L5	071N7172	+ bush: 071B0011 + coupling with single flat in hole (D-shaped)
UNI 2.2 L5 L60		➨	BFP 21 L5	071N7172	+ coupling with single flat in hole (D-shaped)
	UNI-E 2.2 L5 L60	➨	BFP 21 L5	071N7172	Eckerle: G 1/8 in S+R + coupling with single flat in hole (D-shaped)
UNI 2.2 L5 L62		➨	BFP 21 L5	071N7172	
UNI 2.2 L5 M14-C1	UNI.E 2.2 L5 M14-12	➨	BFP 21 L5	071N7172	
UNI 2.2 L5 S20	UNI-E 2.2 L5 S20	➨	BFP 21 L5	071N7172	Eckerle: 10-25 bar, BFP: Max. 20 bar + coupling with single flat in hole (D-shaped)
UNI 2.2 L5 S20-21-BUD	UNI-E 2.2 L5 S20 BUD	➨	BFP 21 L5	071N7172	Eckerle: Max. 25 bar, BFP: Max. 20 bar + coupling with single flat in hole (D-shaped)
UNI 2.2 L5 S74	UNI-E 2.2 L5 L14	➨	BFP 21 L5	071N7172	Eckerle: 10-25 bar, BFP: Max. 20 bar + coupling with single flat in hole (D-shaped)
	UNI-E 2.2 L5 S74	➨	BFP 21 L5	071N7172	G 1/8 in S+R. Eckerle: Max. 25 bar
UNI 2.2 R5 L14	UNI-E 2.2 R5 L14	➨	BFP 21 R5	071N7173	
	UNI-E 22 R5 M14	➨	BFP 21 R5	071N7173	
UNI 2.2 R5 M45	UNI-E 2.2 R5 M15	➨	BFP 21 R5	071N7173	+ bush: 071B0011
UNI 2.2 R5 R14	UNI-E 2.2 R5 R14	➨	BFP 21 R5	071N7173	
UNI 2.2 R5 R60-21	UNI-E 2.2 R5 R60	➨	BFP 21 R5	071N7173	Eckerle: G 1/8 in S+R + coupling with single flat in hole (D-shaped)
UNI 2.2 R5 R80B	UNI-E 2.2 R5 R60	➨	BFP 21 R5	071N7173	
	UNI-E 2.2 R5 S14	➨	BFP 21 R5	071N7173	
UNI 2.2 R5 S60	UNI-E 2.2 R5 S60	➨	BFP 21 R5	071N7173	

Conversion Eckerle ➨ BFP Service

Eckerle		➨	Danfoss oil pumps		
Old designation	New designation	➨	Type	Code no.	Comments/accessories
	UNI-E 2.2 L6 L14	➨	BFP 21 L5	071N7172	Eckerle: 75 l/h, BFP: Max. 40 l/h at 12 bar
UNI 2.2 L6 L16W	UNI-E 2.2 L6 L16-10	➨	BFP 21 L5	071N7172	Eckerle: 75 l/h, BFP: Max. 40 l/h at 12 bar + 071N0047
UNI 2.2 L6 L24	UNI-E 2.2 L6 L24	➨	BFP 21 L5	071N7172	Eckerle: 120 l/h, BFP: Max. 40 l/h at 12 bar
	UNI-E 2.2 L6 LR14-81	➨	BFP 21 L5	071N7172	
UNI 2.2 R6 M24	UNI-E 2.2 R6 M24	➨	BFP 21 R5	071N7173	
UNI 2.2 R6 S24-ET	UNI-E 2.2 R6 S24 (-40)	➨	BFP 21 R5	071N7173	
UNI 2.2 R6 S24 ET(R1)	UNI-E 2.2 R6 S24-40	➨	BFP 21 R5	071N7173	
UNI 2.3 L1 L56 (W-1-0	UNI-E 2.3 L1 L26-80	➨	BFP 20 L3	071N7168	Eckerle: 10-25 bar BFP: Max. 20 bar + flange: 071N0047
UNI 2.3 L1 R54	UNI-E 2.3 L1 R24-13	➨	BFP 20 L3	071N7168	Eckerle: 10-25 bar, BFP: Max. 20 bar
	UNI-E L5 L24-13	➨	BFP 20 L5	071N7126	Eckerle: Max. 25 bar, BFP: Max. 20 bar
UNI 2.3 L5 L54	UNI-E 2.3 L5 L24-13	➨	BFP 20 L5	071N7126	Eckerle: 10-25 bar, BFP: Max. 20 bar
UNI 2.3 L5 L56-I (W-06)	UNI-E 2.3 L5 L26-80	➨	BFP 20 L5	071N7126	Eckerle: 10-25 bar, BFP: Max. 20 bar + flange: 071N0047
	UNI-E 2.3 L5 L64	➨	BFP 20 L5	071N7126	Eckerle: G $^{1}/_{8}$ in S+R
UNI 2.3 L5 R54-S	UNI-E 2.3 L5 R24-13	➨	BFP 20 L5	071N7126	
UNI 2.3 R5 L54-05	UNI-E 2.3 R5 L24	➨	BFP 20 R5	071N7129	Eckerle: Max. 25 bar, BFP: Max. 20 bar
	UNI-E 2.3 R5 R24-13	➨	BFP 20 R5	071N7129	
UNI 2.3 R5 R54		➨	BFP 20 R5	071N7129	Eckerle: 10-25 bar, BFP: Max. 20 bar
UNI 2.3 R5 R64-I	UNI-E 2.3 R5 R24-93	➨	BFP 20 R5	071N7129	Eckerle: Max. 25 bar, BFP: Max. 20 bar
UNI 2.3 R6 L55-05	UNI-E 2.3 R6 L25	➨	BFP 20 R5	071N7129	Eckerle: 75 l/h, BFP: 40 l/h at 12 bar + 071B0011
UNI 2.4 L1 M10-VO	UNI-E 2.4 L1 M10-22	➨	BFP 52E L3	071N3201[4)]	+ coupling with single flat in hole (D-shaped)
UNI 2.4 L1 M14-C1	UNI-E 2.4 L1 M14-12	➨	BFP 52E L3	071N3201[4)]	
UNI 2.4 L1 R14-C		➨		No repl.	
UNI 2.4 L1 R14-V1-21	UNI-E 2.4 L1 R14-12	➨		No repl.	Righthand nozzle outlet on Eckerle
UNI 2.4 L1 R44	UNI-E 2.4 L1 R14	➨		No repl.	

4) The pump NC valve must be connected in parallel to the NC valve in nozzle line.

Conversion Eckerle ➡ BFP Service

Eckerle		➡	Danfoss oil pumps		
Old designation	New designation	➡	Type	Code no.	Comments/accessories
	UNI-E 2.4 L5 L20	➡	BFP 52E L5	071N3202[4)]	+ coupling with single flat in hole (D-shaped)
UNI 2.4 L5 L24	UNI-E 2.4 L5 L24	➡	BFP 52E L5	071N3202[4)]	
	UNI-E 2.4 L5 M20	➡	BFP 52E L5	071N3202[4)]	+ coupling with single flat in hole (D-shaped)
UNI 2.4 L5 M24		➡	BFP 52E L5	071N3202[4)]	
UNI 2.4 L5 M20-21	UNI-E 2.4 L5 M20	➡	BFP 52E L5	071N3202[4)]	+ coupling with single flat in hole (D-shaped)
UNI 2.4 L5 R24		➡		No repl.	
UNI 2.4 L5 R24		➡		No repl.	Righthand nozzle outlet on Eckerle
UNI 2.4 L5 S24	UNI-E 2.4 L5 S24	➡		No repl.	
UNI 2.4 R5 L24		➡	BFP 52E R5	071N3204[4)]	
UNI 2.4 R5 L24-05	UNI-E 2.4 R5 L24	➡	BFP 52E R5	071N3204[4)]	
UNI 2.4 R5 R24	UNI-E 2.4 R5 R24	➡		No repl.	Righthand nozzle outlet on Eckerle
UNI 2.4 R5 S70		➡		No repl.	
UNI 2.4 R5 S70-ET	UNI-E 2.4 R5 S70	➡		No repl.	
UNI 2.4 R5.5 L24	UNI-E 2.4 R5.5 L24	➡		No repl.	
UNI 2.4 L6 L22	UNI-E 2.4 L6 L22	➡	BFP 52E L5	071N3202[4)]	Eckerle: Max. 75 l/h, BFP: Max. 40 l/h at 12 bar + bush: 071B0011
UNI 2.4 L6 L24		➡	BFP 52E L5	071N3202[4)]	Eckerle: Max. 75 l/h, BFP: Max. 40 l/h at 12 bar
UNI 2.4 L6 L24-05	UNI-E 2.4 L6 L24	➡	BFP 52E L5	071N3202[4)]	
UNI 2.4 L6 M24-C1	UNI-E 2.4 L6 M24-12	➡	BFP 52E L5	071N3202[4)]	
UNI 2.4 R6 S24		➡		No repl.	Righthand nozzle outlet on Eckerle
UNI 2.4 R6 S24 ET	UNI-E 2.4 R6 S24	➡		No repl.	
UNI 2.4 R7 R54-06	UNI-E 2.4 R7 R24	➡		No repl.	Righthand nozzle outlet on Eckerle
UNI 2.42 R5 R70-ET	UNI-E 2.42 R5 R70	➡		No repl.	
	UNI-E 2.42 L5 L64-65	➡	BFP 52E L5	071N3202	Eckerle: G $^{1}/_{8}$ in S+R
	UNI-E 2.6 L5 L14	➡	BFP 20 L5	071N7126	
UNI 2.6 L5 L44		➡	BFP 20 L5	071N7126	Possible changeover to 1-pipe operation
	UNI-E 2.6 L6 L14	➡	BFP 20 L5	071N7126	Eckerle: 75 l/h, BFP: 40 l/h at 12 bar
UNI 2.6 L6 L44	UNI-E 2.6 L6 L14	➡	BFP 20 L5	071N7126	

4) The pump NC valve must be connected in parallel to the NC valve in nozzle line.

Conversion Eckerle ➨ BFP Service

Eckerle		➨	Danfoss oil pumps		
Old designation	New designation	➨	Type	Code no.	Comments/accessories
UNI 2.6 Stage 6		➨		No repl.	
UNI 2.6 Stage 7		➨		No repl.	
UNI 2.7 L5 L44		➨	BFP 20 L5	071N7126	
UNI 2.7 R5 R44	UNI-E 2.7 R5 R14	➨	BFP 20 R5	071N7129	
UNI 2.8 L5 L16		➨	BFP 21 L5	071N7172	BFP without remote setting + flange: 071N0047
UNI 2.91 L5 L44	UNI-E 2.91 L5 L14	➨		No repl.	Eckerle ∅32, RSA ∅54 neck diameter
UNI 2.91 L7 L44-05	UNI-E 2.91 L7 L14	➨		No repl.	
UNI 2.91 R7 L44	UNI-E 2.91 R7 L14	➨		No repl.	
UNI 2.93 L1 R44	UNI-E 2.93 L1 R14	➨		No repl.	
UNI 2.96 L5 L44-05	UNI-E 2.96 L5 L14	➨		No repl.	
UNI 2.96 L7 L44	UNI-E 2.96 L7 L14	➨		No repl.	
UNI 2.10 L7 L56-S-W	UNI-E 2.10 L7 L26-11	➨	RSA 60	070L3362	+ flange: 070-0211
UNI 2.10 L7 L56-W1-05	UNI-E 2.10 L7 L26-11	➨	RSA 60	070L3362	
UNI 2.10 L8 L56-S-W	UNI-E 2.10 L8 L26-11	➨	RSA 95	070L3482	
UNI 2.10 L8 L56-W1-05	UNI-E 2.10 L8 L26-11	➨	RSA 95	070L3482	+ flange: 070-0211
UNI 2.12 L1 L14		➨	BFP 21 L3	071N7170	
UNI 2.12 L1 L64		➨	BFP 21 L3	071N7170	Eckerle: G 1/8 in S+R
UNI 2.12 L1 M14		➨	BFP 21 L3	071N7170	
UNI 2.12 L1 M64		➨	BFP 21 L3	071N7170	Eckerle: G 1/8 in S+R
UNI 2.12 L1 M64-65		➨	BFP 21 L3	071N7170	
UNI 2.12 L6 M14		➨	BFP 21 L5	071N7172	Eckerle: 75 l/h, BFP: 40 l/h at 12 bar
UNI 2.12 L6 M14-65		➨	BFP 21 L5	071N7172	
UNI 2.13 L8 L56-S	UNI-E 2.13 L8 L26-11	➨		No repl.	
UNI 2.17 L6 M14-65		➨		No repl.	
BPC	BPC-40 1.1 LL 11	➨	BFP 20 L3	071N7168	
BPC	BPC-40 1.1 LL 21	➨	BFP 20 L3	071N7168	Eckerle: G 1/8 in S+R
BPC	BPC-40 1.1 LR 11	➨	BFP 20 L3	071N7168	

Conversion Eckerle ➨ BFP Service

Eckerle		➨	Danfoss oil pumps		
Old designation	New designation	➨	Type	Code no.	Comments/accessories
BPC	BPC-40 1.1 LR 21	➨	BFP 20 L3	071N7168	Eckerle: G 1/8 in S+R
BPC	BPC-40 1.1 RL 11	➨	BFP 20 R3	071N7169	
BPC	BPC-40 1.1 RL 21	➨	BFP 20 R3	071N7169	Eckerle: G 1/8 in S+R
BPC	BPC-40 1.1 RR 11	➨	BFP 20 R3	071N7169	
BPC	BPC-40 1.1 RR 21	➨	BFP 20 R3	071N7169	Eckerle: G 1/8 in S+R
BPC	BPC-40 1.1 RR 11(+)	➨	BFP 20 R3	071N7169	+ flange and bush 071N0047
BPC	BPC-40 2.1 LL 11	➨	BFP 21 L3	071N7170	
BPC	BPC-40 2.1 LL 21	➨	BFP 21 L3	071N7170	Eckerle: G 1/8 in S+R
BPC	BPC-40 2.1 RL 11	➨	BFP 21 R3	071N7171	
BPC	BPC-40 2.1 RR 11	➨	BFP 21 R3	071N7171	
BPC	BPC-40 2.1 RR 21	➨	BFP 21 R3	071N7171	Eckerle: G 1/8 in S+R
BPC	BPC-40 2.1 LL 11(+)	➨	BFP 21 L3	071N7170	+ flange and bush 071N0047
BPC	BPC-40 2.1 LR 11	➨	BFP 21 L3	071N7170	
BPC	BPC-40 2.1 LR 21	➨	BFP 21 L3	071N7170	Eckerle: G 1/8 in S+R
BPC	BPC-40 2.1 RL 21	➨	BFP 21 R3	071N7171	Eckerle: G 1/8 in S+R
BPC	BPC-40 2.3 LL 11	➨	BFP 52E L3	071N3201	The pump NC-valve must be connected in parallel to the NC-valve in the nozzleline
BPC					
BPC	BPC-40 2.3 LR 11	➨		No repl.	Righthand nozzle outlet on Eckerle
BPC	BPC-40 2.3 RL 11	➨	BFP 52E R3	071N3203	The pump NC-valve must be connected in parallel to the NC-valve in the nozzleline
BPC	BPC-40 2.3 RR 21	➨		No repl.	Righthand nozzle outlet on Eckerle

Conversion Delta ➨ BFP Service

Delta				➨	Relevant Danfoss types		
Type	Code no.		1-2 pipe	➨	Type	Code no.	Comments/accessories
V	V1LR2 4	(or 5)	2	➨	BFP 20 L3	071N7168	
V	V1LR1 4	(or 5)	1	➨	BFP 20 L3	071N7168[2)]	
V	V1LL2 4	(or 5)	2	➨	BFP 20 L3	071N7168	
V	V1LL1 4	(or 5)	1	➨	BFP 20 L3	071N7168[2)]	
V	V1RL2 4	(or 5)	2	➨	BFP 20 R3	071N7169	
V	V1RL1 4	(or 5)	1	➨	BFP 20 R3	071N7169[2)]	
V	V1RR2 4	(or 5)	2	➨	BFP 20 R3	071N7169	
V	V1RR1 4	(or 5)	1	➨	BFP 20 R3	071N7169[2)]	
V	V2LR2 4	(or 5)	2	➨	BFP 20 L5	071N7126	
V	V2LR1 4	(or 5)	1	➨	BFP 20 L5	071N7126[2)]	
V	V2LL2 4	(or 5)	2	➨	BFP 20 L5	071N7126	
V	2LL1 4	(or 5)	1	➨	BFP 20 L5	071N7126[2)]	Delta: 57 l/h: BFP: 40 l/h at 10 bar
V	V2RL2 4	(or 5)	2	➨	BFP 20 R5	071N7129	
V	V2RL1 4	(or 5)	1	➨	BFP 20 R5	071N7129[2)]	
V	V2RR2 4	(or 5)	2	➨	BFP 20 R5	071N7129	
V	V2RR1 4	(or 5)	1	➨	BFP 20 R5	071N7129[2)]	
VU	VU3LR 1 4	(or 5)	1	➨	BFP 20 L5	071N7126[2)]	
VU	VU3LR 2 4	(or 5)	2	➨	BFP 20 L5	071N7126	Delta: 80 l/h: BFP: 40 l/h at 10 bar
VU	VU3RL 1 4	(or 5)	1	➨	BFP 20 R5	071N7129[2)]	
VU	VU3RL 2 4	(or 5)	2	➨	BFP 20 R5	071N7129	
VD	VD1LR 2 4	(or 5)	2	➨	BFP 20 L3	071N7168	
VD	VD1LR 1 4	(or 5)	1	➨	BFP 20 L3	071N7168[2)]	
VD	VD1LL 2 4	(or 5)	2	➨	BFP 20 L3	071N7168	
VD	VD1LL 1 4	(or 5)	1	➨	BFP 20 L3	071N7168[2)]	
VD	VD1RL 2 4	(or 5)	2	➨	BFP 20 R3	071N7169	
VD	VD1RL 1 4	(or 5)	1	➨	BFP 20 R3	071N7169[2)]	
VD	VD1RR 2 4	(or 5)	2	➨	BFP 20 R3	071N7169	
VD	VD1RR 1 4	(or 5)	1	➨	BFP 20 R3	071N7169[2)]	

2) This pump is delivered for 2-pipe operation. A changeover to 1-pipe operation is possible, see Changeover 1 - 2 pipe.

Conversion Delta ➨ BFP Service

Delta				➨	Relevant Danfoss types		
Type	Code no.		1-2 pipe	➨	Type	Code no.	Comments/accessories
VD	VD2LR 2 4	(or 5)	2	➨	BFP 20 L5	071N7126	Delta: 57 l/h; BFP: 40 l/h at 10 bar
VD	VD2LR 1 4	(or 5)	1	➨	BFP 20 L5	071N7126[2)]	
VD	VD2LL 2 4	(or 5)	2	➨	BFP 20 L5	071N7126	
VD	VD2LL 2 4	(or 5)	2	➨	BFP 20 L5	071N7126[2)]	
VD	VD2RL 2 4	(or 5)	2	➨	BFP 20 R5	071N7129	
VD	VD2RL 1 4	(or 5)	1	➨	BFP 20 R5	071N7129[2)]	
VD	VD2RR 2 4	(or 5)	2	➨	BFP 20 R5	071N7129	
VD	VD2RR 1 4	(or 5)	1	➨	BFP 20 R5	071N7129[2)]	
VD	VD3LR 1 4	(or 5)	1	➨	BFP 20 L5	071N7126[2)]	Delta: 80 l/h; BFP: 40 l/h at 10 bar
VD	VD3LR 2 4	(or 5)	2	➨	BFP 20 L5	071N7126	
VD	VD3RL 1 4	(or 5)	1	➨	BFP 20 R5	071N7129[2)]	
VD	VD3RL 2 4	(or 5)	2	➨	BFP 20 R5	071N7129	
VM	VM1LR 2 4	(or 5) F84-220	2	➨	BFP 21 L3	071N7170	**F84-220:** Indicates coil with loose cable and for 220 V, 50 Hz. If using other voltages the following must be ordered extra: Coil Nr. 071N0061 for 110/120 V a.c. or Coil Nr. 071N0062 for 24 V a.c.
VM	VM1LR 1 4	(or 5) F84-220	1	➨	BFP 21 L3	071N7170[2)]	
VM	VM1LL 2 4	(or 5) F84-220	2	➨	BFP 21 L3	071N7170	
VM	VM1LL 1 4	(or 5) F84-220	1	➨	BFP 21 L3	071N7170[2)]	
VM	VM1RL 2 4	(or 5) F84-220	2	➨	BFP 21 R3	071N7171	
VM	VM1RL 1 4	(or 5) F84-220	1	➨	BFP 21 R3	071N7171[2)]	
VM	VD1RR 2 4	(or 5) F84-220	2	➨	BFP 21 R3	071N7171	
VM	VM1RR 1 4	(or 5) F84-220	1	➨	BFP 21 R3	071N7171[2)]	
VM	VM2LR 2 4	(or 5) F84-220	2	➨	BFP 21 L5	071N7172	Delta: 57 l/h; BFP: 40 l/h at 10 bar — **F84-220:** See above
VM	VM2LR 1 4	(or 5) F84-220	1	➨	BFP 21 L5	071N7172[2)]	
VM	VM2LL 2 4	(or 5) F84-220	2	➨	BFP 21 L5	071N7172	
VM	VM2LL 1 4	(or 5) F84-220	1	➨	BFP 21 L5	071N7172[2)]	
VM	VM2RL 2 4	(or 5) F84-220	2	➨	BFP 21 R5	071N7173	
VM	VM2RL 1 4	(or 5) F84-220	1	➨	BFP 21 R5	071N7173[2)]	
VM	VM2RR 2 4	(or 5) F84-220	2	➨	BFP 21 R5	071N7173	
VM	VM2RR 1 4	(or 5) F84-220	1	➨	BFP 21 R5	071N7173[2)]	

2) This pump is delivered for 2-pipe operation. A changeover to 1-pipe operation is possible, see Changeover 1 - 2 pipe.

Conversion Delta ➨ BFP Service

Delta				➨	Relevant Danfoss types			
Type	Code no.		1-2 pipe	➨	Type	Code no.	Comments/accessories	
VM	VM3LR 1 4	(or 5) F84-220	1	➨	BFP 21 L5	071N7172[2)]	Delta: 80 l/h; BFP: 40 l/h at 10 bar	**F84-220:** See previous page
VM	VM3LR 1 4	(or 5) F84-220	1	➨	BFP 21 L5	071N7172		
VM	VM3LR 2 4	(or 5) F84-220	2	➨	BFP 21 L5	071N7172[2)]		
VM	VM3RL 1 4	(or 5) F84-220	1	➨	BFP 21 R5	071N7173		
VM	VM3RL 2 4	(or 5) F84-220	2	➨	BFP 21 R5	071N7173		
VM	VM1LR 2 4	(or 5) M8-220	2	➨	BFP 21 L3	071N7170	**M8-220:** Indicates coil with fixed cable and for 220 V, 50 Hz. Generally the following cable should be ordered here: Cable no. 071G0200 L = 500 mm, or Cable no. 071G0204 L = 710 mm Cable no. 071G0202 L = 280 mm If using other voltages the following must be ordered extra (only for BFP21): Coil no. 071N0061 for 110/120 V a.c. or Coil no. 071N0062 for 24 V a.c.	
VM	VM1LR 1 4	(or 5) M8-220	1	➨	BFP 21 L3	071N7170[2)]		
VM	VM1LL 2 4	(or 5) M8-220	2	➨	BFP 21 L3	071N7170		
VM	VM1LL 1 4	(or 5) M8-220	1	➨	BFP 21 L3	071N7170[2)]		
VM	VM1RL 2 4	(or 5) M8-220	2	➨	BFP 21 R3	071N7171		
VM	VM1RL 1 4	(or 5) M8-220	1	➨	BFP 21 R3	071N7171[2)]		
VM	VD1RR 2 4	(or 5) M8-220	2	➨	BFP 21 R3	071N7171		
VM	VM1RR 1 4	(or 5) M8-220	1	➨	BFP 21 R3	071N7171[2)]		
VM	VM2LR 2 4	(or 5) M8-220	2	➨	BFP 21 L5	071N7172[*)]		
VM	VM2LR 1 4	(or 5) M8-220	1	➨	BFP 21 L5	071N7172[*) 2)]		
VM	VM2LL 2 4	(or 5) M8-220	2	➨	BFP 21 L5	071N7172[*)]		
VM	VM2LL 1 4	(or 5) M8-220	1	➨	BFP 21 L5	071N7172[*) 2)]		
VM	VM2RL 2 4	(or 5) M8-220	2	➨	BFP 21 R5	071N7173[*)]	**M8-220:** See previous page	
VM	VM2RL 1 4	(or 5) M8-220	1	➨	BFP 21 R5	071N7173[2)]		
VM	VM2RR 2 4	(or 5) M8-220	2	➨	BFP 21 R5	071N7173[*)]		
VM	VM2RR 1 4	(or 5) M8-220	1	➨	BFP 21 R5	071N7173[2)]		
VM	VM3LR 1 4	(or 5) M8-220	1	➨	BFP 21 L5	071N7172[2)]	Delta: 80 l/h; BFP: 40 l/h at 10 bar	
VM	VM3LR 2 4	(or 5) M8-220	2	➨	BFP 21 L5	071N7172		
VM	VM3RL 1 4	(or 5) M8-220	1	➨	BFP 21 R5	071N7173[2)]		
VM	VM3RL 2 4	(or 5) M8-220	2	➨	BFP 21 R5	071N7173		

*) Delta: 57 l/h; BFP: 40 l/h at 10 bar

2) This pump is delivered for 2-pipe operation. A changeover to 1-pipe operation is possible, see Changeover 1 - 2 pipe.

Conversion Delta ➨ BFP Service

Delta			➨	Relevant Danfoss types		
Type	Code no.	1-2 pipe	➨	Type	Code no.	Comments/accessories
VM	VM2RL 2 4 (or 5) M8-220	2	➨	BFP 21 R5	071N7173*)	**M8-220:** See previous page
VM	VM2RL 1 4 (or 5) M8-220	1	➨	BFP 21 R5	071N7173[2)]	
VM	VM2RR 2 4 (or 5) M8-220	2	➨	BFP 21 R5	071N7173*)	
VM	VM2RR 1 4 (or 5) M8-220	1	➨	BFP 21 R5	071N7173[2)]	
VM	VM3LR 1 4 (or 5) M8-220	1	➨	BFP 21 L5	071N7172[2)]	Delta: 80 l/h; BFP: 40 l/h at 10 bar
VM	VM3LR 2 4 (or 5) M8-220	2	➨	BFP 21 L5	071N7172	
VM	VM3RL 1 4 (or 5) M8-220	1	➨	BFP 21 R5	071N7173[2)]	
VM	VM3RL 2 4 (or 5) M8-220	2	➨	BFP 21 R5	071N7173	
VMK	VMK1LR 2 4-6 / F84-220	2	➨	BFP 52E L3	071N3201[4)]	**F84-220:** Indicates coil with loose cable and for 220 V, 50 Hz BFP 52E is not delivered for other voltages
VMK	VMK1LR 1 4-6 / F84-220	1	➨	BFP 52E L3	071N3201[2)]	
VMK	VMK1LL 2 4-6 / F84-220	2	➨		No repl.**	
VMK	VMK1LL 1 4-6 / F84-220	1	➨		No repl.**	
VMK	VMK1RL 2 4-6 / F84-220	2	➨		No repl.**	
VMK	VMK1RL 1 4-6 / F84-220	1	➨		No repl.**	
VMK	VMK1RR 2 4-6 / F84-220	2	➨	BFP 52E R3	071N3203[4)]	
VMK	VMK1RR 1 4-6 / F84-220	1	➨	BFP 52E R3	071N3203[2)]	
VMK	VMK2LR 2 4-6 / F84-220	2	➨	BFP 52E L5	071N3202[4)]	Delta: 57 l/h; 40 l/h at 10 bar
VMK	VMK2LR 1 4-6 / F84-220	1	➨	BFP 52E L5	071N3202[2)]	
VMK	VMK2LL 2 4-6 / F84-220	2	➨		No repl.**	
VMK	VMK2LL 1 4-6 / F84-220	1	➨		No repl.**	
VMK	VMK2RL 2 4-6 / F84-220	2	➨		No repl.**	
VMK	VMK2RL 1 4-6 / F84-220	1	➨		No repl.**	
VMK	VMK2RR 2 4-6 / F84-220	2	➨	BFP 52E R5	071N3204[4)]	
VMK	VMK2RR 1 4-6 / F84-220	1	➨	BFP 52E R5	071N3204[2)]	

*) Delta: 57 l/h; BFP: 40 l/h at 10 bar

** No repl. means: Delta has nozzle outlet to the right.

2) This pump is delivered for 2-pipe operation. A changeover to 1-pipe operation is possible, see Changeover 1 - 2 pipe.

4) The pump NC-valve must be connected in parallel to the NC-valve in the nozzleline.

Conversion Delta ➨ BFP Service

Delta			➨	Relevant Danfoss types			
Type	Code no.	1-2 pipe	➨	Type	Code no.	Comments/accessories	
VMK	VMK3LR 14 (or 5) M8-220	1	➨	BFP 52E L5	071N3202[2) 4)]	Delta: 68 l/h; Danfoss: 40 l/h at 10 bar	**F84-220:** See previous page
VMK	VMK3LR 24 (or 5) M8-220	2	➨	BFP 52E L5	071N3202[4)]		
VMK	VMK3RR 14 (or 5) M8-220	1	➨	BFP 52E R5	071N3204[2) 4)]		
VMK	VMK3RR 24 (or 5) M8-220	2	➨	BFP 52E R5	071N3204[4)]		
VMK	VMK1LR 24-6 / M8-220	2	➨	BFP 52E L3	071N3201[4)]	**M8-220:** Indicates coil with fixed cable and for 220 V, 50 Hz. The following must be ordered separately For NC: Cable Nr. 071G0200 L = 500 mm, or Cable Nr. 071G0202 L = 280 mm, or Cable Nr. 071G0204 L = 710 mm For NO: Cable Nr. 071G0201 L = 500 mm, or Cable Nr. 071G0203 L = 280 mm, or Cable Nr. 071G0205 L = 710 mm	
VMK	VMK1LR 14-6 / M8-220	1	➨	BFP 52E L3	071N3201[2) 4)]		
VMK	VMK1LL 24-6 / M8-220	2	➨		No repl.*		
VMK	VMK1LL 14-6 / M8-220	1	➨		No repl.**		
VMK	VMK1RL 24-6 / M8-220	2	➨		No repl.**		
VMK	VMK1RL 14-6 / M8-220	1	➨		No repl.**		
VMK	VMK1RR 24-6 / M8-220	2	➨	BFP 52E R3	071N3203[4)]		
VMK	VMK1RR 14-6 / M8-220	1	➨	BFP 52E R3	071N3203[2) 4)]		
VMK	VMK2LR 24-6 / M8-220	2	➨	BFP 52E L5	071N3202[4)]		
VMK	VMK 2LR 14-6 / M8-220	1	➨	BFP 52E L5	071N3202[2) 4)]		
VMK	VMK2LL 24-6 / M8-220	2	➨		No repl.*		
VMK	VMK2LL 14-6 / M8-220	1	➨		No repl.**		
VMK	VMK2RL 24-6 / M8-220	2	➨		No repl.**		
VMK	VMK2RL 14-6 / M8-220	1	➨		No repl.**		
VMK	VMK2RR 24-6 / M8-220	2	➨	BFP 52E R5	071N3204[4)]	Delta: 57 l/h; Danfoss: 40 l/h at 10 bar	**M8-220:** See above. BFP 52E is only delivered for 220/240 V a.c.
VMK	VMK2RR 14-6 / M8-220	1	➨	BFP 52E R5	071N3204[2) 4)]		
VMK	VMK3LR 14 (or 5) M8-220	1	➨	BFP 52E L5	071N3202[2) 4)]		
VMK	VMK3LR 24 (or 5) M8-220	2	➨	BFP 52E L5	071N3202[4)]		
VMK	VMK3RR 14 (or 5) M8-220	1	➨	BFP 52E R5	071N3204[2) 4)]	Delta: 68 l/h; Danfoss: 40 l/h at 10 bar	
VMK	VMK3RR 24 (or 5) M8-220	2	➨	BFP 52E R5	071N3204[4)]		

*) Delta: 57 l/h; BFP: 40 l/h at 10 bar
** No repl. means: Delta has nozzle outlet to the right.
2) This pump is delivered for 2-pipe operation. A changeover to 1-pipe operation is possible, see Changeover 1 - 2 pipe.
4) The pump NC-valve must be connected in parallel to the NC-valve in the nozzleline.

Spare Parts and Accessories RSA/RSH

Description		Pump type/size	Code no.	Content
Filter	Filter RSA	RSA 28/40/60, RSL 050	070-0032	Filter, diaphragm, gasket
		RSA 95/125	070-0033	Filter, diaphragm, gasket
	Filter RSH	RSH 32	070-0032	Filter, diaphragm, gasket
		RSH 63/95/125	070-0033	Filter, diaphragm, gasket
Spring	Spring 1-5 bar	RSA	070-0030	Low pressure spring 1-5 bar
	Spring 15-30 bar	RSA	070-0031	High pressure spring 15-30 bar
Flange	Flange	RSA and RSH	070-0211	Flange and screw
Screw	2-pipe screw	RSA and RSH	070-0020	Screw
Adapter	G 1/4" adapter	RSA	070-0042	G 1/4" adapter, cobber washer

Spare parts and accessories – BFP (MS)

Description		Pump type/size	Code No.	Content
Filter	Cartridge	BFP 20, 21, 31, 41 and 52E	071N0064	Filter and O-ring
	Ring	BFP 11	071N0063	Filter and O-ring
O-ring	O-ring Ø54 and Ø9,75 for cover	All	071N1033	O-ring
Coils	Description on coil			
	NC 071N0051 220/240 V a.c.	BFPC - BFA - BFP 11, 21, 31, 41and 52E. Size 2 - 3 - 4 - 5 - 6	071N1006	Coil, nut and washer
	NC 071N0052 110/120 V a.c.	BFPC - BFA - BFP 11, 21, 31, 41and 52E. Size 2 - 3 - 4 - 5 - 6	071N0061	Coil, nut and washer
	NC 071N0805 110/120 V a.c.	BFPC - BFA - BFP 11, 21, 31, 41and 52E. Size 2 - 3 - 4 - 5 - 6	071N0061	Coil, nut and washer
	NC 071N0053 24 V a.c./12 V d.c.	BFPC - BFA - BFP 11, 21, 31, 41and 52E. Size 2 - 3 - 4 - 5 - 6	071N0062	Coil, nut and washer
	NC 071N0631 230 V a.c.	BFP 11, 12, 51, 52 and 53. Size 4 - 6 - 8 - 11 - 13	071N1006	Coil, nut and washer
	NC 071N0802 24 V d.c.	BFPC - BFA - BFP 11, 21, 31, 41and 52E. Size 2 - 3 - 4	071N0008	Coil, nut and washer
	NO 071N0054 220/240 V a.c.	BFP 52E. Size 3 - 5	071N1007	Coil, nut and washer
	NC 071N0808	BFPC-BFA-BFP 11, 12, 21, 31, 41, 51, 52E, 53 and BFPM size 2-3-4-5-6-8-11-12-13	071N1006	Coil, nut and washer
	NO 071N0809	BFP 51, 52E, 53 and BFPM52 size 3-4-5-6-8-11-12-13	071N1007	Coil, nut and washer
	NC 071N0810	BFP 11, 21, 41 and 52E, size 3-5 Diamond Service pumps	071N1006	Coil, nut and washer
	NO 071N0811	BFP 11, 21, 41 and 52E, size 3-5 Diamond Service pumps	071N1007	Coil, nut and washer
Valves	NC	BFA - BFPC - BFP 11, 21, 31, 41 and 52E. Size 2 - 3 - 4 - 5	071N0050	Valve, nut and washer
	NC for DC coil	BFA - BFPC - BFP 11, 21, 31, 41 and 52E. Size 2 - 3 - 4	071N0007	Valve, nut and washer
	NC	LE-S	071N3011	Valve, nut and washer
	NO for NO coil only	BFP 52E. Size 3 - 5	071N3010	Valve, nut and washer
	NO	BFP 51, 52, 52E and 53. Size 3 - 4 - 5 - 8. Special type	071N0005	Valve, nut and washer
Plugs	Plug for cartridge filter	BFP 20, 21, 31, 41 and 52E	071N0074	Plug and O-ring
	Plug 1/8" for P and V port	All	071N0604	Plug and O-ring
	Plug M10 for NC valve	All	071N0065	Plug
	Plug 1/4" for 1/4" conection	All	071N1055	Plug and O-ring
Change	Change over set, 1-pipe operation	BFP 10/11 Size 3-4-5-6	071N1092	Washer, 1/4" plug and O-ring
	Change over set, 2-pipe operation	BFP 20, 21, 41, 52 Size 2-3-4-5	071N0041	2 pipe plug
Busch/	Bush 32 - 54 mm and flange	All	071N0047	Bush, flange and screws
flange	Bush 32 - 54 mm	All	071B0011	Bush and screws

Accessories – BFP

Bush and screws
Code no. 071B0011

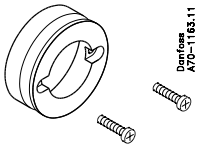

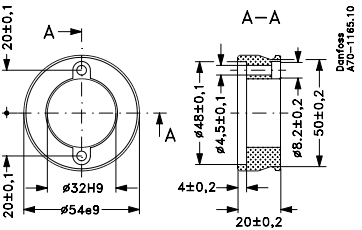

Bush, screws and flange
Code no. 071N0047

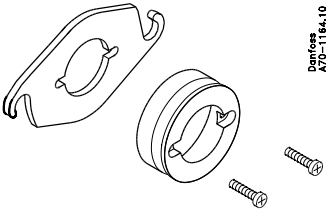

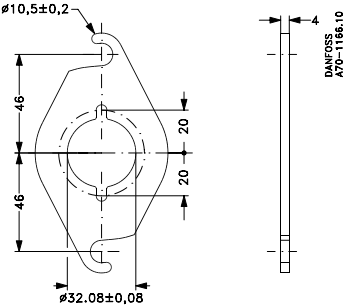

Dimensions – BFP 10/11

Type 3, 5

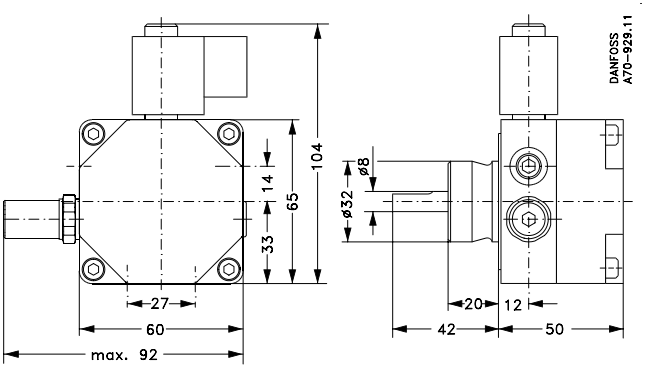

Dimensions – BFP 20/21

Type 3 and 5

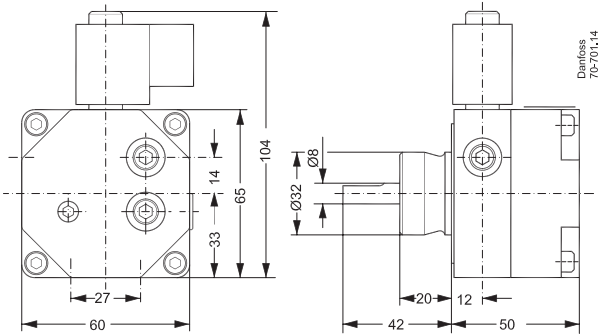

Dimensions – BFP 41

Type 3 and 5

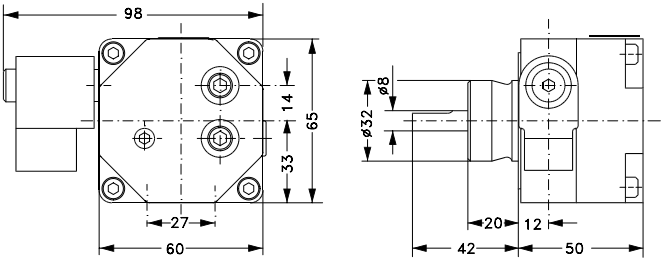

Dimensions – BFP 52 E

Type 3 and 5

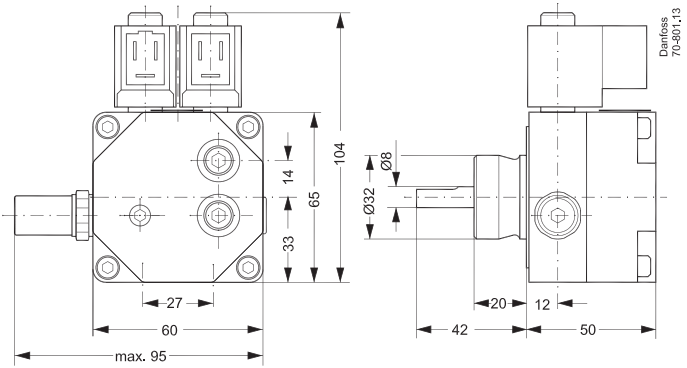

Changeover between 1- and 2-pipe operation. Filter replacement (H)

Note !
Shaft rotation, location of nozzle outlet and other connections are seen from shaft end.

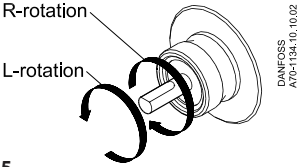

RSA

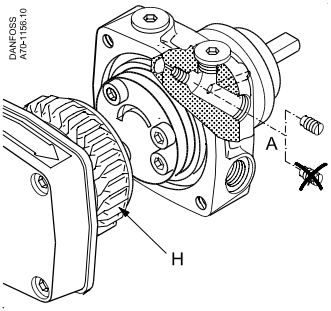

2-pipe operation:
Screw (A) fitted

1-pipe operation:
Without screw (A)

BFP 10/11 type 3, 5

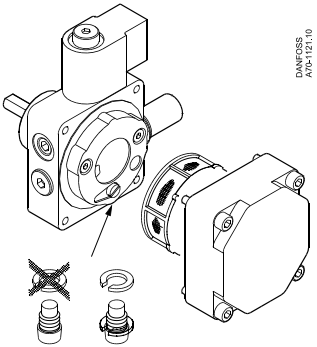

2-pipe operation:
Screw (A) without bypass washer

1-pipe operation:
bypass washer fitted on screw (A)

Changeover between 1- and 2-pipe operation, Filter replacement (H)

BFP 20/21 type 3, 5
BFP 41 type 3, 5
BFP 52E type 3, 5

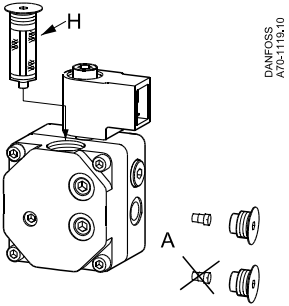

2-pipe operation:
Screw (A) fitted

1-pipe operation:
Without screw (A)

Connections – RSA

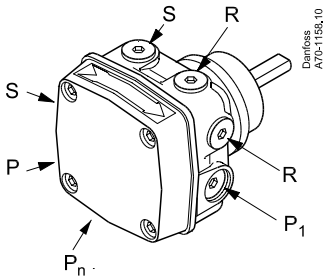

P_1	Pressure adjustment
S	Suction inlet G 1/4
R	Return outlet G 1/4
P	Pressure outlet G 1/8
P_n	Pressure gauge port G 1/8

Connections – BFP 10/11

Type 3 and 5

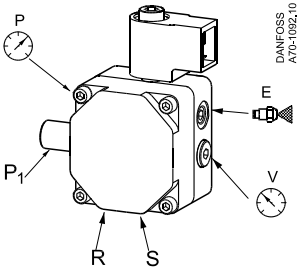

P_1	Pressure adjustment
S	Suction inlet G 1/4
R	Return outlet G 1/4
E	Nozzle outlet G 1/8
P	Pressure gauge port G 1/8
V	Vacuum gauge port G 1/8

Connections – BFP 20/21

Type 3 and 5
Servicepumpe

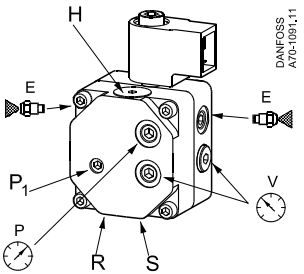

P_1	Pressure adjustment
S	Suction inlet G 1/4
R	Return outlet G 1/4
E	Nozzle outlet G 1/8
P	Pressure gauge port G 1/8
V	Vacuum gauge port G 1/8
H	Filter

Connections – BFP 41

Type 3 and 5

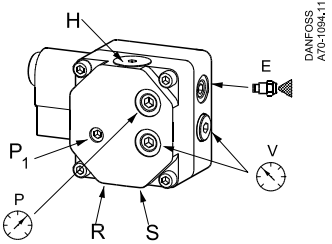

P_1	Pressure adjustment
S	Suction inlet G 1/4
R	Return outlet G 1/4
E	Nozzle outlet G 1/8
P	Pressure gauge port G 1/8
V	Vacuum gauge port G 1/8
H	Filter

Connections – BFP 52E

Type 3 and 5

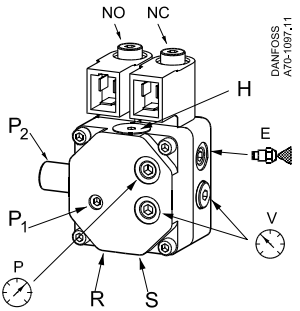

P_1	Pressure adjustment stage 1
P_2	Pressure adjustment, stage 2
S	Suction inlet G 1/4
R	Return outlet G 1/4
E	Nozzle outlet G 1/8
P	Pressure gauge port G 1/8
V	Vacuum gauge port G 1/8
H	Filter

2. Oil nozzles

Contents

Introduction ..... Page 69
Brass nozzles OD, LE and HR/SR ..... Page 70
Steel nozzles HFD/HD and SFD/SD ..... Page 75
Conversion ..... Page 76
Dimensions ..... Page 78
Marking ..... Page 81

Danfoss Oil Nozzles Programme

- Capacities from 0.3 to 35 USgal/h
- EN standardised from 1.46 to 6.55 kg/h
- 30°/45°/60°/70°/80°spray angles
- H/S/B spray patterns
- HFD/HD and SFD/SD round headed nozzles in Stainless Steel

Hollow Spray Pattern
The hollow spray pattern is represented in the following nozzle types:
OD-H, LE, EH, AH,
KH, HFD, HD, HR

Solid Spray Pattern
The solid spray pattern is represented within the following nozzle types:
OD-S, LE, ES, AS,
SFD, SD, SR

Semi-Solid Spray Pattern
The semi-solid spray pattern is found in types:
OD-B and AB.

Brass Nozzles
– Type OD-H

Hollow spray pattern

USgal/h	Type OD (Hollow)			kg/h
	45°	60°	80°	
0.30		030H6102	030H8102	1.15
0.35		030H6103	030H8103	1.35
0.40		030H6904	030H8904	1.46
0.45		030H6906	030H8906	1.66
0.50	030H4908	030H6908	030H8908	1.87
0.55	030H4910	030H6910	030H8910	2.11
0.60	030H4912	030H6912	030H8912	2.37
0.65	030H4914	030H6914	030H8914	2.67
0.75	030H4916	030H6916	030H8916	2.94
0.85	030H4918	030H6918	030H8918	3.31
1.00	030H4920	030H6920	030H8920	3.72
1.10	030H4922	030H6922	030H8922	4.24
1.20	030H4923	030H6923	030H8923	4.45
1.25	030H4924	030H6924	030H8924	4.71
1.35	030H4926	030H6926	030H8926	5.17
1.50	030H4928	030H6928	030H8928	5.84
1.65	030H4929	030H6929	030H8929	6.08
1.75	030H4930	030H6930	030H8930	6.55
2.00	030H4132	030H6132	030H8132	7.42
2.25	030H4134	030H6134	030H8134	8.35
2.50	030H4136	030H6136	030H8136	9.29
2.75	030H4138	030H6138	030H8138	10.5
3.00	030H4140	030H6140	030H8140	11.6

These oil nozzles are manufactured in accordance with European standard EN 293

Brass Nozzles – Type OD-S

Solid spray pattern

USgal/h	Type OD (Solid)				kg/h
	30°	45°	60°	80°	
0.20			030F7109		0.76
0.25			030F7113		0.95
0.30			030F6102	030F8102	1.15
0.35			030F6103	030F8103	1.35
0.40		030F4904	030F6904	030F8904	1.46
0.45		030F4906	030F6906	030F8906	1.66
0.50	030F3108	030F4908	030F6908	030F8908	1.87
0.55	030F3110	030F4910	030F6910	030F8910	2.11
0.60	030F3112	030F4912	030F6912	030F8912	2.37
0.65	030F3114	030F4914	030F6914	030F8914	2.67
0.75	030F3116	030F4916	030F6916	030F8916	2.94
0.85	030F3118	030F4918	030F6918	030F8918	3.31
1.00	030F3120	030F4920	030F6920	030F8920	3.72
1.10	030F3122	030F4922	030F6922	030F8922	4.24
1.20		030F4923	030F6923	030F8923	4.45
1.25	030F3124	030F4924	030F6924	030F8924	4.71
1.35	030F3126	030F4926	030F6926	030F8926	5.17
1.50	030F3128	030F4928	030F6928	030F8928	5.84

These oil nozzles are manufactured in accordance with European standard EN 293

Solid spray pattern

USgal/h	Type OD (Solid)				kg/h
	30°	45°	60°	80°	
1.65	030F3129	030F4929	030F6929	030F8929	6.08
1.75	030F3130	030F4930	030F6930	030F8930	6.55
2.00	030F3132	030F4132	030F6132	030F8132	7.42
2.25	030F3134	030F4134	030F6134	030F8134	8.35
2.50	030F3136	030F4136	030F6136	030F8136	9.29
2.75	030F3138	030F4138	030F6138	030F8138	10.5
3.00	030F3140	030F4140	030F6140	030F8140	11.6
3.50		030F4142	030F6142	030F8142	12.9
4.00		030F4144	030F6144	030F8144	14.2
4.50		030F4146	030F6146	030F8146	16.1
5.00		030F4148	030F6148	030F8148	18.5
5.50		030F4150	030F6150	030F8150	20.9
6.00		030F4152	030F6152	030F8152	23.4
7.00			030F6154		27.9
8.00			030F6156		31.5
9.00			030F6158		35.4

These oil nozzles are manufactured in accordance with European standard EN 293

Brass Nozzles
– Type OD-B

Semi-Solid spray pattern

USgal/h	Type OD (Semi-solid)			kg/h
	45°	60°	80°	
0.60		030B0103	030B0203	2.37
0.65	030B0054	030B0104	030B0204	2.67
0.75	030B0055	030B0105	030B0205	2.94
0.85	030B0056	030B0106	030B0206	3.31
1.00	030B0057	030B0107	030B0207	3.72
1.25	030B0059	030B0109	030B0209	4.71
1.35	030B0060	030B0110	030B0210	5.17
1.50	030B0061	030B0111	030B0211	5.84
2.00	030B0063	030B0113	030B0213	7.42
2.25	030B0064	030B0114		8.35
2.50	030B0065	030B0115	030B0215	9.29
2.75	030B0066	030B0116		10.5
3.00	030B0067	030B0117	030B0217	11.6
3.75	030B0069	030B0119	030B0219	13.8
4.50	030B0071	030B0121	030B0221	16.1
5.00	030B0073	030B0123	030B0223	18.5
5.50	030B0075	030B0125	030B0225	20.9

These oil nozzles are manufactured in accordance with European standard EN 293

Semi-Solid spray pattern

USgal/h	Type OD (Semi-solid)			kg/h
	45°	60°	80°	
6.00	030B0077	030B0127	030B0227	23.4
6.50	030B0079	030B0129	030B0229	26.1
7.50	030B0081	030B0131	030B0231	29.8
8.50	030B0083	030B0133	030B0233	33.1
10.0	030B0085	030B0135	030B0235	37.7
11.0	030B0087	030B0137	030B0237	42.5
12.0	030B0089	030B0139	030B0239	47.7
13.5	030B0091	030B0141	030B0241	54.3
15.0	030B0093	030B0143	030B0243	60.4
17.0		030B0145	030B0245	67.4
19.5		030B0147	030B0247	76.2
22.0	030B0096	030B0149	030B0249	86.4
25.0		030B0151		96.7
28.0		030B0153		109.5
31.5	030B0099	030B0155	030B0255	122.5
35.0	030B0100			133.5

These oil nozzles are manufactured in accordance with European standard EN 293

Brass Nozzles – Type LE

Hollow spray pattern

USgal/h	Type LE (Hollow)		kg/h
	60°	80°	
0.40	030H6704	030H8704	1.46
0.45	030H6706	030H8706	1.66
0.50	030H6708	030H8708	1.87
0.55	030H6710	030H8710	2.11
0.60	030H6712	030H8712	2.37
0.65	030H6714	030H8714	2.67
0.75	030H6716	030H8716	2.94
0.85	030H6718	030H8718	3.31
1.00	030H6720	030H8720	3.72
1.35		030H8726	5.17
1.75		030H8730	6.55

These oil nozzles are manufactured in accordance with European standard EN 293

Solid spray pattern

USgal/h	Type LE (Solid)			kg/h
	45°	60°	80°	
0.40		030F6704	030F8704	1.46
0.45		030F6706	030F8706	1.66
0.50	030F4708	030F6708	030F8708	1.87
0.55	030F4710	030F6710	030F8710	2.11
0.60	030F4712	030F6712	030F8712	2.37
0.65	030F4714	030F6714	030F8714	2.67
0.75	030F4716	030F6716	030F8716	2.94
0.85	030F4718	030F6718	030F8718	3.31
1.00	030F4720	030F6720	030F8720	3.72
1.10			030F8722	4.24
1.50	030F4728	030F6728		5.84
1.75		030F6730		6.55

These oil nozzles are manufactured in accordance with European standard EN 293

Brass Nozzles
– Type HR/SR

Hollow spray pattern

USgal/h	Type HR (Hollow)			kg/h
	45°	60°	80°	
0.35			030H9903	1.35
0.40	030H5904	030H7904	030H9904	1.46
0.42			030H9905	1.56
0.45		030H7906	030H9906	1.66
0.50	030H5908	030H7908	030H9908	1.87
0.55		030H7910	030H9910	2.11
0.60		030H7912		2.37
0.65		030H7914	030H9914	2.67
0.75		030H7916	030H9916	2.94
0.85			030H9918	3.31
1.00		030H7920	030H9920	3.72
1.35		030H7926		5.17

These oil nozzles are manufactured in accordance with European standard EN 293

Solid spray pattern

USgal/h	Type SR (Solid)			kg/h
	45°	60°	80°	
0.30			030F9902	1.15
0.35			030F9903	1.35
0.40	030F5904	030F7904	030F9904	1.46
0.45	030F5906	030F7906	030F9906	1.66
0.50	030F5908	030F7908	030F9908	1.87
0.55	030F5910	030F7910	030F9910	2.11
0.60	030F5912	030F7912	030F9912	2.37
0.65	030F5914	030F7914	030F9914	2.67
0.75	030F5916	030F7916	030F9916	2.94
0.85	030F5918	030F7918		3.31
1.00	030F5920	030F7920		3.72

These oil nozzles are manufactured in accordance with European standard EN 293

Steel nozzles
– Type HFD/HD and SFD/SD

Hollow spray pattern

USgal/h	Type HFD/HD (Hollow)				kg/h
	45°	60°	70°	80°	
0.40	030H4004	030H6004	030H7004	030H8004	1.5
0.45	030H4006	030H6006		030H8006	1.68
0.50	030H4008	030H6008	030H7008	030H8008	1.87
0.55	030H4010	030H6010		030H8010	2.06
0.60	030H4012	030H6012		030H8012	2.24
0.65	030H4014	030H6014		030H8014	2.43
0.75	030H4016	030H6016		030H8016	2.81
0.85	030H4018	030H6018		030H8018	3.18
1.00	030H4020	030H6020		030H8020	3.74
1.10	030H4022	030H6022		030H8022	4.12
1.25	030H4024	030H6024		030H8024	4.68
1.35	030H4026	030H6026		030H8026	5.05
1.50	030H4028	030H6028		030H8028	5.61
1.65	030H4029	030H6029		030H8029	6.17
1.75	030H4030	030H6030		030H8030	6.55
2.00	030H4032	030H6032		030H8032	7.48
2.25	030H4034	030H6034		030H8034	8.42
2.50	030H4036	030H6036		030H8036	9.35

These oil nozzles are manufactured in accordance with European standard EN 293

Solid spray pattern

USgal/h	Type SFD/SD (Solid)			kg/h
	45°	60°	80°	
0.30	030F4002	030F6002	030F8002	1.12
0.35	030F4003	030F6003	030F8003	1.31
0.40	030F4004	030F6004	030F8004	1.5
0.45	030F4006	030F6006	030F8006	1.68
0.50	030F4008	030F6008	030F8008	1.87
0.55	030F4010	030F6010	030F8010	2.06
0.60	030F4012	030F6012	030F8012	2.24
0.65	030F4014	030F6014	030F8014	2.43
0.75	030F4016	030F6016	030F8016	2.81
0.85	030F4018	030F6018	030F8018	3.18
1.00	030F4020	030F6020	030F8020	3.74
1.10	030F4022	030F6022	030F8022	4.12
1.25	030F4024	030F6024	030F8024	4.68
1.35	030F4026	030F6026	030F8026	5.05
1.50	030F4028	030F6028	030F8028	5.61
1.65	030F4029	030F6029		6.17
1.75	030F4030	030F6030	030F8030	6.55
2.00	030F4032	030F6032	030F8032	7.48
2.25	030F4034	030F6034	030F8034	8.42
2.50	030F4036	030F6036	030F8036	9.35

These oil nozzles are manufactured in accordance with European standard EN 293

Conversion oil burner nozzles of other makes -> Danfoss oil burner nozzles – European Market

Delavan		Relevant Danfoss types	
Type		1. choice	2. choice
A	➨	Danfoss H	Danfoss HFD/HD
B	➨	Danfoss S	Danfoss SFD/SD
W	➨	Danfoss B	–

Steinen		Relevant Danfoss types	
Type		1. choice	2. choice
Steinen PH	➨	Danfoss H/B	–
Steinen H, HT	➨	Danfoss HFD/HD	Danfoss H
Steinen SS	➨	Danfoss B	–
Steinen Q	➨	Danfoss SFD/SD	Danfoss B/S
Steinen S, ST	➨	Danfoss SFD/SD	Danfoss S

Fluidics		Relevant Danfoss types	
Type		1. choice	2. choice
SF	➨	Danfoss SFD	Danfoss S
HF	➨	Danfoss HFD	Danfoss H
S	➨	Danfoss SD	Danfoss S
H	➨	Danfoss HD	Danfoss H

Monarch		Relevant Danfoss types	
Type		1. choice	2. choice
PL	➨	Danfoss H/B	–
NS	➨	Danfoss HFD	Danfoss H
PLP	➨	Danfoss B	–
AR	➨	Danfoss SFD/SD	Danfoss S
R	➨	Danfoss SFD/SD	Danfoss S

This interchange is based on experience and should therefore only be considered as a guide

Conversion oil burner nozzles of other makes -> Danfoss oil burner nozzles – Other Markets

Delavan		Relevant Danfoss types	
Type		1. choice	2. choice
A	➨	Danfoss H	Danfoss Hago H
B	➨	Danfoss S	Danfoss Hago B
W	➨	Danfoss B	Danfoss Hago W, SS

Steinen		Relevant Danfoss types	
Type		1. choice	2. choice
Steinen PH	➨	Danfoss Hago H	Danfoss H/B
Steinen H, HT	➨	Danfoss Hago DFN-H/H	Danfoss H
Steinen SS	➨	Danfoss Hago W/SS	Danfoss B
Steinen Q	➨	Danfoss Hago W/SS	Danfoss B
Steinen S, ST	➨	Danfoss Hago DFN-B/B/ES	Danfoss S

Fluidics		Relevant Danfoss types	
Type		1. choice	2. choice
SF	➨	Danfoss Hago DFN-B/B	Danfoss S
HF	➨	Danfoss Hago DFN-H/H	Danfoss H
S	➨	Danfoss Hago B	Danfoss S
H	➨	Danfoss Hago H	Danfoss H

Monarch		Relevant Danfoss types	
Type		1. choice	2. choice
NS	➨	Danfoss Hago H	Danfoss H
PL	➨	Danfoss Hago H	Danfoss H/B
PLP	➨	Danfoss Hago P	Danfoss B
R	➨	Danfoss Hago B	Danfoss S

This interchange is based on experience and should therefore only be considered as a guide

Dimensions

OD, LE

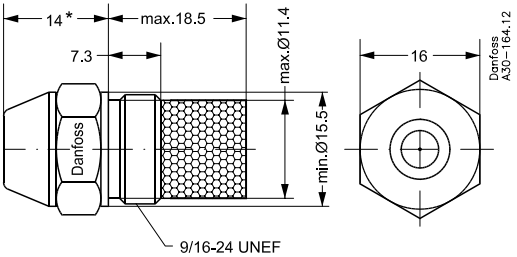

* EN standard

Dimensions

HR/SR

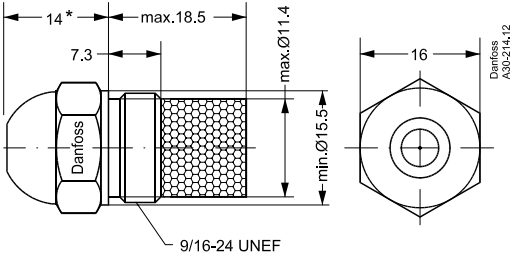

* EN-norm

Dimensions

HFD/HD, SFD/SD

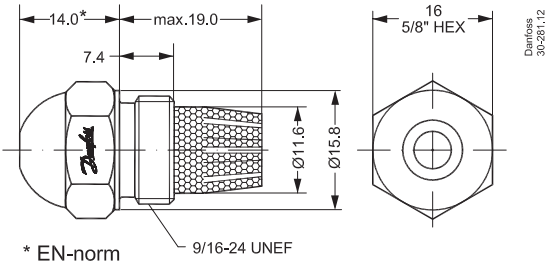

* EN-norm

Marking and lid colour of the Danfoss oil nozzles

S-nozzle, red lid, white lettering

H-nozzle, blue lid, white lettering

B-nozzle, transparent lid, black lettering

CEN Marking and the current marking

Danfoss A30-166.11

Marking of the standard nozzle

Danfoss 30-295.1d

SFD/SD-nozzle, black lid, white lettering

HFD/HD-nozzle, red lid, black lettering

Marking SF, SD, HFD, HD-nozzles

Danfoss 30-294.10

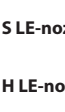

S LE-nozzle, green lid, white lettering

H LE-nozzle, green lid, white lettering

Marking of the LE-nozzles

Danfoss A30-162.1

3. Oil burner controls

Contents

Introduction		Page 83
Standard types	OBC 80 series	Page 84
Conversion	57F, 57H, 57L and older BHO series → OBC 80	Page 85
Conversion	BHO 60/70 and OBC 80 series → OBC 80 series	Page 88
Conversion	LOA/LMO → OBC 80 series	Page 89
Dimensions	OBC 80 series	Page 91
Flame sensors		Page 92
Service kit		Page 94
Accessories		Page 95
Flash codes		Page 96

Oil burner controls

Oil burner control conversions are given in the tables below:

The following old Danfoss oil burner controls can be replaced: types 57F, 57H, 57L and BHO.

According to the European standard EN 298, oil burner controls must have undervoltage protection. OBC 80 serie does incorporate this protection.

Therefore it is this oil burner control that most often replaces the old Danfoss types.

The overview is built up as follows:

- Column 1 always gives the old oil burner control types that are to be replaced.
- Column 2 gives the code numbers of the oil burner controls that are to be replaced.
- Column 4 gives the new types of Danfoss oil burner controls.
- Column 5 gives the corresponding code numbers.
- The last column gives the code numbers of the corresponding accessories.

OBC 80 series – Standard types

Type	Code No.	Pre-purge/ Pre-ignition t1/t3*	Post-ignition t2n	Interval V1-V2 t4	Safety time t2 maks.	Post-purge t8	Remote alarm	Remote reset
OBC 81.10	057H8701	13	15	-	10	-	-	-
OBC 81A.10	057H8708	13	15	-	10	-	✓	✓
OBC 81A.12	057H8706	13	5	-	10	-	✓	✓
OBC 82.10	057H8702	13	15	15	10	-	✓	-
OBC 82.11	057H8703	6	20	20	10	-	✓	-
OBC 82A.12	057H8707	13	5	15	10	-	✓	✓
OBC 84.10	057H8705	25	2	5	5	-	✓	✓
OBC 85B.10	057H8710	13	15	15	10	90	✓	✓

*) Due to the initialisation of the electronics, it may take up to two seconds before ignition is enabled

Conversion Danfoss 057F/H/L/BHO ➨ OBC 80 series

Older Danfoss series		➨	Relevant Danfoss types		
Type	Code no.	➨	Type	Code no.	Comments/accessories
57F1	057F0001	➨	OBC 82.10	057H8702	
57F3	057F0003	➨	OBC 82.10	057H8702	
57H1	057H0062	➨	OBC 82.10	057H8702	
57H1	057H0072	➨	OBC 82.10	057H8702	
57H1	057H1002	➨	OBC 82.10	057H8702	
57H3	057H1003	➨	OBC 82.10	057H8702	+ 057H7224
57H1 WLE	057H0042	➨	OBC 84.10	057H8705	
57H1	057H0052	➨	OBC 82.10	057H8702	
57H2	057H0053	➨	OBC 82.10	057H8702	
57H2	057H0063	➨	OBC 82.10	057H8702	
57H3	057H1005	➨		No repl.	
57H3	057H0054	➨	OBC 82.10	057H8702	
57H3	057H0064	➨	OBC 82.10	057H8702	
57H5	057H0045	➨	OBC 84.10	057H8705	+ 057H7224
57H5	057H0055	➨	OBC 82.10	057H8702	
57H5	057H0065	➨	OBC 82.10	057H8702	
57H6	057H0032	➨		No repl.	
57L 1	057L0001	➨	OBC 82.10	057H8702	
57L 1d	057L0002	➨	OBC 82.10	057H8702	+ 057H7224
57L 3	057L0003	➨	OBC 82.10	057H8702	Use motor starter on 380 V
57L 3d	057L0004	➨	OBC 82.10	057H8702	
BCG 1d	057L1001	➨		No repl.	
BCG 1d	057L1002	➨		No repl.	
BCG 1d	057L1003	➨		No repl.	
BCG 3,3d	057L1004	➨		No repl.	
BCG 3.5d	057L1005	➨		No repl.	

Conversion Danfoss 057F/H/L/BHO ➨ OBC 80 series

Older Danfoss series		➨	Relevant Danfoss types		
Type	Code no.	➨	Type	Code no.	Comments/accessories
BHO 1A	057H3013	➨	OBC 82.10	057H8702	
BHO 1B	057H3014	➨	OBC 82.10	057H8702	
BHO 1	057H3011	➨	OBC 82.10	057H8702	
BHO 1 WLE	057H3010	➨	OBC 84.10	057H8705	
BHO 1 WLE	057H3054	➨	OBC 84.10	057H8705	
BHO 3B	057H3018	➨	OBC 82.11	057H8703	
BHO 3B	057H3020	➨	OBC 82.11	057H8703	
BHO 4	057H4104	➨	OBC 82.10	057H8702	+ 057H7224
BHO 4B	057H4144	➨	OBC 82.10	057H8702	
BHO 4 WLE	057H4110	➨	OBC 84.10	057H8705	
BHO 4.1	057H3012	➨	OBC 82.10	057H8702	
BHO 4.1B	057H3039	➨	OBC 82.10	057H8702	
BHO 4.1B	057H3044	➨	OBC 82.10	057H8702	
BHO 5	057H4105	➨	OBC 82.10	057H8702	
BHO 5.1	057H3015	➨	OBC 82.10	057H8702	
BHO 6	057H3032	➨		No repl.	
BHO 11	057H2011	➨	OBC 82.10	057H8702	
BHO 11.1	057H2011	➨	OBC 82.10	057H8702	
BHO 11.1	057H2013	➨	OBC 82.10	057H8702	
BHO 11.1	057H2014	➨	OBC 82.10	057H8702	+ 057H7224
BHO 12	057H2031	➨	OBC 82.10	057H8702	
BHO 12	057H2012	➨	OBC 82.10	057H8702	
BHO 12.1	057H2005	➨	OBC 82.10	057H8702	
BHO 12.1	057H2012	➨	OBC 82.10	057H8702	

Conversion Danfoss 057F/H/L/BHO ➨ OBC 80 series

Older Danfoss series		➨	Relevant Danfoss types		
Type	Code no.	➨	Type	Code no.	Comments/accessories
BHO 15	057H2015	➨	OBC 82.10	057H8702	
BHO 21	057H2042	➨	OBC 84.10	057H8705	
BHO 25	057H2045	➨	OBC 84.10	057H8705	
BHOV 1	057H3016	➨	OBC 82.10	057H8702	
BHOV 4	057H3030	➨	OBC 82.10	057H8702	
BHOV 4A	057H3033	➨	OBC 82.10	057H8702	+ 057H7224
BHOV 4B	057H3034	➨	OBC 82.10	057H8702	
BHOV 12.2	057H2030	➨	OBC 82.10	057H8702	
BHOV 12.2	057H2033	➨	OBC 82.10	057H8702	
BHOV 12.2	057H2034	➨	OBC 82.10	057H8702	
BHOV 22	057H2054	➨	OBC 84.10	057H8705	
FRA	086B0090	➨	LAE 10 LFE 10	Landis & Stäfa [1)]	Not supplied by Danfoss
FRU	086B0091	➨	LFE	Landis & Stäfa	Not supplied by Danfoss

[1)] Ionisation

Conversion Danfoss BHO 60/70 and OBC 80 series ➨ OBC 80 series

BHO 60/70 and OC 80 series		➨	Relevant Danfoss types		
Type	Code no.	➨	Type	Code no.	Comments/accessories
BHO 61A	057H7031	➨	OBC 82A.12	057H8707	
BHO 61	057H7032	➨	OBC 82.10	057H8702	
BHO 62	057H7034	➨	OBC 82.10	057H8702	
BHO 62D	057H7035	➨	OBC 82.10	057H8702	
BHO 61	057H7033		No repl.		110 V
BHO 64	057H7036	➨	OBC 82.10	057H8702	
BHO 64A	057H7030	➨	OBC 82A.12	057H8707	
BHO64.1	057H7037	➨	OBC 82.11	057H8703	
BHO 71.10	057H6101	➨	OBC 81.10	057H8701	
BHO 71A.10	057H6108	➨	OBC 81A.10	057H8708	
BHO 72.10	057H6102	➨	OBC 82.10	057H8702	
BHO 72.11	057H6103	➨	OBC 82.11	057H8703	
BHO 73.10	057H6104	➨	OBC 82A.12	057H8707	
BHO 74.10	057H6105	➨	OBC 84.10	057H8705	
OBC 81.10	057H8101	➨	OBC 81.10	057H8701	
OBC 82.10	057H8102	➨	OBC 82.10	057H8702	
OBC 82.11	057H8103	➨	OBC 82.11	057H8703	
OBC 84.10	057H8105	➨	OBC 84.10	057H8705	
OBC 81A.12	057H8106	➨	OBC 81A.12	057H8706	
OBC 82A.12	057H8107	➨	OBC 82A.12	057H8707	
OBC 81A.10	057H8108	➨	OBC 81A.10	057H8708	
OBC 85B.10	057H8110	➨	OBC 85B.10	057H8710	

Concerning controls of the BHO 60 series:
Please note:
If only the upper part is replaced, it must be ensured that the LD/LDS flame sensor is connected to the terminals 11 and 12 in the base part.

Conversion controls other makes ➨ OBC 80 series

Siemens/ Landis & Stäfa	➨	Relevant Danfoss types		
Type	➨	Type	Code no	Comments
LOA 21.171B27	➨	OBC 82.10	057H8702	
LOA 21.173A27	➨	OBC 82A.12	057H8707	If terminal 6 is used for ignition use OBC 82.10
LOA 22.171B27	➨	OBC 82.10	057H8702	
LOA 22"DF"	➨	OBC 82.10	057H8702	
LOA 24.171B27	➨	OBC 82.10	057H8702	
LOA 24.173A27	➨	OBC 82A.12	057H8707	If terminal 6 is used for ignition use OBC 82.10
LOA 24.174A27	➨	OBC 82A.12	057H8707	If terminal 6 is used for ignition use OBC 82.10
LOA 24.571C27	➨	OBC 82.11	057H8703	
LOA 26.171B27	➨	OBC 82A.12	057H8707	OBC 82A.12 has short post ignition time
LOA 36.171A27	➨	OBC 82A.12	057H8707	OBC 82A.12 has short post ignition time
LOA 44.252A27	➨	OBC 84.10	057H8705	
LMO 14.111. (A2/B2/C2)	➨	OBC 81A.10	057H8708	
LMO 14.113. (A2/B2/C2)	➨	OBC 81A.12	057H8706	
LMO 24.111. (A2/B2/C2)	➨	OBC 82.10	057H8702	If remote reset is needed OBC 82A.12 can be used
LMO 24.113. (A2/B2/C2)	➨	OBC 82A.12	057H8707	
LMO 24.255. (A2/B2/C2)	➨	OBC 84.10	057H8705	OBC 84.10 has 5 sec. interval from valve V1 to V2
LMO 44.255. (A2/B2/C2)	➨	OBC 84.10	057H8705	
LMO 64.311. (A2/B2/C2)	➨	OBC 85B.10	057H8710	

Please note:
If only the upper part is replaced, it must be ensured that the LD/LDS flame sensor is connected to the terminals 11 and 12 in the base part.

Oil burner controls

Defective components	Replacement components
Older oil burner controls BHO 60 series or BHO 70 series	OBC 80 series + Service Kit 057H7224 Only OBC 80
Old LD/LDS 057H002x + 057H202x	OBC 80 series + Service Kit 057H7224
LD/LDS 057H70xx	On OBC 70 and OBC 80 series: Photo unit only. On OBC 60 series: OBC 80 series + new LD/LDS 057H71xx

In burners without solenoid valve the motor must be connnected to the solenoid valve terminals so that instead of prepurge, only pre-ignition takes place.
E.g. during maintenance work on the burner, if the oil burner control or photo unit shows defects it must be noted that there are different series of these components.
In some circumstances both components must be replaced even though only one of them is defective. See table.

Dimensions

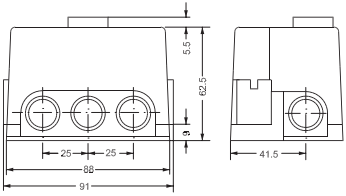

Oil burner control
with base
Cable entry
057H7211

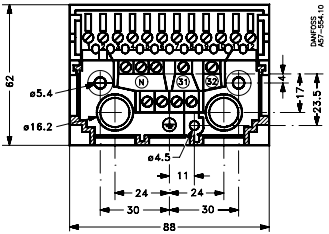

Base 057H7210

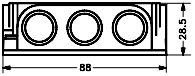

Cable entry
057H7211

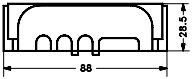

Cable entry
57H7212

Flame sensors

Ultraviolet flame sensor UV

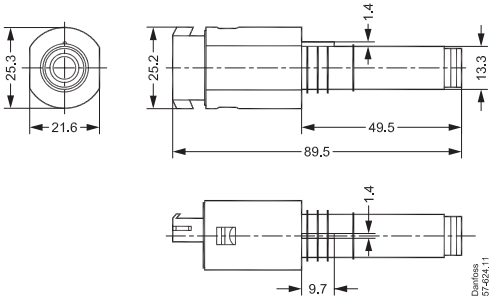

	UV1 Normal sensitivity	Flange
Code no.	057H7051	057H7061

	300 mm cable	400 mm cable	500 mm cable
Code no.	057H1040	057H1041	057H1042

Flame sensors

Flame sensors LD/LDS

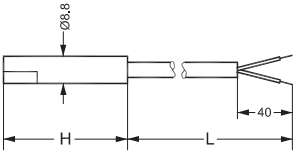

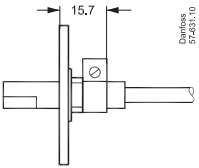

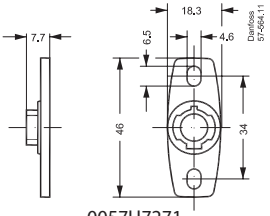

0057H7271

Type	Old colour	Old code no.	➡	New Code no.	New colour	H	L
LD	Black	057H7078	➡	057H7105	Black	65.5	2000
LD	Black	057H7079	➡	057H7106	Black	65.5	800[1]
LD	Black	057H7081	➡	057H7107	Black	50	500
LDS	Red	057H7085	➡	057H7108	Blue	50	500
LDS	Red	057H7087	➡	057H7109	Blue	65.5	600[2]
LDS	Red	057H7091	➡	057H7110	Blue	105	350
LDS	Red	057H7092	➡	057H7111	Blue	65.5	800
LDS	Blue	057H7093	➡	057H7108	Blue	50	500
LDS	Blue	057H7094	➡	057H7109	Blue	65.5	600
LDS	Red	057H7096	➡	057H7108	Blue	50	500[3]
LDS	Blue	057H7097	➡	057H7108	Blue	50	500[3]

[1] Old cable length L: 780 mm
[2] Old cable length L: 520 mm
[3] Old cable length L: 230 mm

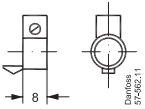

057H7272

Content Service kit 057H7224

	057H7210
	057H7211
	057H7212
	057H7109
	057H7271
	057H7272
	–

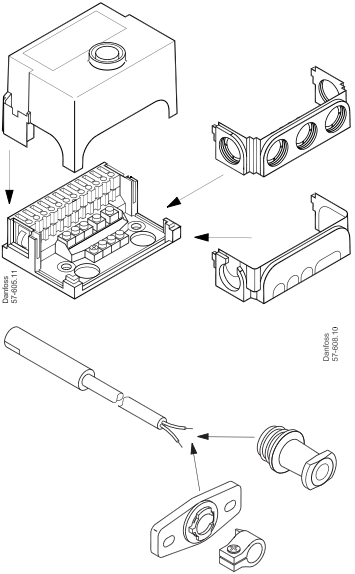

Accessories OBC/BHO

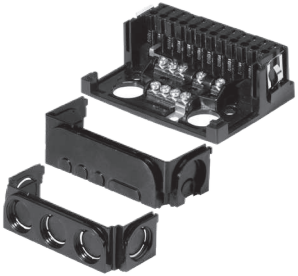

Description	Code no.
Base BHB	057H7210
Front plate for BHB, 5 × PG 11	057H7211
Front plate for BHB, 8 × knockouts	057H7212

Flash codes

In the event of operating lockout, the cause of error can be read out as a flash code by holding down the reset button for at least 5 seconds and then releasing it.
Undervoltage will, however, be displayed automatically.
Reset can be performed directly in alarm mode (constant red light) or in flash code mode by pressing the reset button for at least 0.5 seconds but no more than 3 seconds.
In flash code mode it is possible to return to alarm mode by holding down the reset button again for at least 5 seconds.

Flash codes

Event	Code
False light	2 flashes
No flame when safety time elapses	3 flashes
More than three restarts in the same cycle	4 flashes
Max. waiting time on preheater overrun (10 min)	5 flashes
Supply voltage above 264 V a.c.	6 flashes
Under voltage	8 flashes
Application failure (EMC)	Continuous flashes

3. Ignition units

Contents

Introduction		Page 98
Conversion	Danfoss EBI -> EBI4 Service	Page 100
Conversion	Danfoss EBI4 -> EBI4 Service	Page 101
Conversion	Danfoss transformers 052L series -> EBI4 Service	Page 102
Conversion	Satronic/Honeywell -> EBI4 Service	Page 104
Conversion	COFI -> EBI4 Service	Page 104
Conversion	Siemens -> EBI4 Service	Page 104
Conversion	Beru -> EBI4 Service	Page 104
Conversion	F.I.D.A. -> EBI4 Service	Page 105
Conversion	Brahma -> EBI4 Service	Page 106
Dimensions		Page 107
Service		Page 109

Introduction

When a Danfoss ignition transformer or an electronic ignition unit must be replaced, please proceed according to the following table.

Ignition transformers are stated to the left and ignition unit EBI, which must be used, to the right.

When replacing an ignition unit from a competitor, please take the below criterions into consideration:

In order to choose the right ignition unit, make sure that the ignition unit is designed for a supply voltage (primary voltage) of 220/230 V and that a ignition unit with higher or equal ED is choosen (ED = duty cycle).

Danfoss' electronic ignition units

EBI4 Series
Electronic ignition units for oil burners
- ED 33% at 60°C
- 1or 2 pole ignition
- Complies with the RoHs and WEEE directives
- 230 V or 120 V

EBI4 C Series
Electronic ignition units for constant ignition
- ED 100% at 35°C
- 1 or 2 pole ignition
- Complies with the RoHs and WEEE directives

EBI4 HP Series
Electronic ignition units for large oil burners
- 50% stronger spark compared to other ignition units
- ED 33% at 60°C
- 1 or 2 pole ignition
- Complies with the RoHs and WEEE directives

Conversion Danfoss EBI ➡ EBI4 Service

EBI Series		➡	Relevant Danfoss types		
Type	Code no.	➡	Type	Code no.	Comments/accessories
EBI	052F0030	➡	EBI4 M S	052F4045	
EBI	052F0036	➡	EBI4	052F4031	
EBI	052F0037	➡	EBI4 M S	052F4045	
EBI	052F0052	➡	EBI4 CM S	052F4047	
EBI	052F0058	➡	EBI4	052F4031	
EBI 1P	052F0040	➡	EBI4 1P S	052F4046	
EBI 1P	052F0043	➡	EBI4 1P S	052F4046	
EBI 1P	052F0044	➡	EBI4 1P S	052F4046	
EBI 1P	052F0045	➡	EBI4 1P	052F4044	
EBI 1P (120 V)	052F0054	➡	EBI4 1P (120 V)	052F4063	+ Primary cable 052F5052
EBI 1P (120 V)	052F0057	➡	EBI4 1P (120 V)	052F4063	
EBI M	052F0033	➡	EBI4 M S	052F4045	
EBI M	052F0034	➡	EBI4 M S	052F4045	
EBI M	052F0035	➡	EBI4 M S	052F4045	
EBI M	052F0039	➡	EBI4 M S	052F4045	
EBI M	052F0050	➡	EBI4 M S	052F4045	
EBI M	052F0074	➡	EBI4 M S	052F4045	
EBI M (120 V)	052F0053	➡	EBI 4M (120 V)	052F4062	+ Primary cable 052F5052
EBI M (120 V)	052F0055	➡	EBI 4M (120 V)	052F4062	
EBI C	052F0070	➡	EBI4 CM S	052F4047	
EBI C	052F0071	➡	EBI4 CM S	052F4047	
EBI C1P	052F0079	➡	EBI4 C1P S	052F4048	
EBI CM	052F0077	➡	EBI4 CM S	052F4047	
EBI CM	052F0078	➡	EBI4 CM	052F4035	
EBI HP1P	052F0084	➡	EBI4 1P S	052F4046	
EBI HPM	052F0075	➡	EBI4 M S	052F4045	
EBI HPM	052F0076	➡	EBI4 HPM	052F4033	

Conversion Danfoss EBI4 ➨ EBI4 Service

EBI4 Series		➨	Relevant Danfoss types		
Type	Code no.	➨	Type	Code no.	Comments/accessories
EBI4	052F4030	➨	EBI4 M S	052F4045	
EBI4	052F4031	➨	EBI4	052F4031	
EBI4	052F4041	➨	EBI4 M S	052F4045	
EBI4	052F4037	➨	EBI4 M S	052F4045	
EBI4 1P	052F4040	➨	EBI4 1P S	052F4046	
EBI4 1P	052F4044	➨	EBI4 1P	052F4044	
EBI4 1P	052F4050	➨	EBI4 1P S	052F4046	
EBI4 M	052F4038	➨	EBI4 M S	052F4045	
EBI4 M	052F4043	➨	EBI4 M S	052F4045	
EBI4 M	052F4042	➨	EBI4 M S	052F4045	
EBI4 M	052F4055	➨	EBI 4 M	052F4035	
EBI4 M	052F4057	➨	EBI4 M S	052F4045	
EBI4 M	052F4059	➨	EBI4 M S	052F4045	
EBI4 M	052F4065	➨	EBI4 M S	052F4045	
EBI4 C1P	052F4036	➨	EBI4 C1P S	052F4048	
EBI4 CM	052F4034	➨	EBI4 CM S	052F4047	
EBI4 CM	052F4035	➨	EBI4 CM	052F4035	
EBI4 HP1P	052F4049	➨	EBI4 1P S	052F4046	
EBI4 HPM	052F4032	➨	EBI4 M S	052F4045	
EBI4 HPM	052F4033	➨	EBI4 HPM	052F4033	

Conversion Danfoss transformers 052L series ➡ EBI4 Service

52L		➡	Relevant Danfoss types		
Type	Code no.	➡	Type	Code no.	Comments/accessories
52L	052L0000-03	➡	EBI4	052F0063	
52L	052L0005	➡	EBI4	052F0063	
52L	052L0007-09	➡	EBI4	052F0063	
52L	052L0014-15	➡	EBI4	052F0063	
52L	052L0017	➡	EBI4	052F0063	
52L	052L0019-20	➡	EBI4	052F0063	
52L	052L0023	➡	EBI4	052F0063	
52L	052L0028	➡	EBI4	052F0063	
52L	052L0034	➡	EBI4	052F0063	
52L	052L0036-39	➡	EBI4	052F0063	
52L	052L0041-42	➡	EBI4	052F0063	
52L	052L0045-48	➡	EBI4	052F0063	
52L	052L0050-56	➡	EBI4	052F0063	
52L	052L0058-61	➡	EBI4	052F0063	
52L	052L0063-64	➡	EBI4	052F0063	
52L	052L0066-79	➡	EBI4	052F0063	
52L	052L0082	➡	EBI4	052F0063	
52L	052L0086-87	➡	EBI4	052F0063	
52L	052L0089-93	➡	EBI4	052F0063	
52L	052L0095-98	➡	EBI4	052F0063	
52L	052L1011	➡	EBI4	052F0063	
52L	052L1033	➡	EBI4	052F0063	
52L	052L1050-51	➡	EBI4	052F0063	
52L	052L1054-57	➡	EBI4	052F0063	
52L	052L1075-76	➡	EBI4	052F0063	
52L	052L1080	➡	EBI4	052F0063	
52L	052L1085	➡	EBI4	052F0063	

Conversion Danfoss transformers 052L series ➡ EBI4 Service

52L		➡	Relevant Danfoss types		
Type	Code no.	➡	Type	Code no.	Comments/accessories
52L	052L0018	➡	EBI4 1P S	052F4046	+ Primary cable 052F5052 and accessory set 052F0061
52L	052L0026	➡	EBI4 1P S	052F4046	
52L	052L0030	➡	EBI4 1P S	052F4046	
52L	052L0040	➡	EBI4 1P S	052F4046	
52L	052L0049	➡	EBI4 1P S	052F4046	
52L	052L0065	➡	EBI4 1P S	052F4046	
52L	052L0088	➡	EBI4 1P S	052F4046	
52L	052L1058	➡	EBI4 1P S	052F4046	
52L	052L0006	➡	EBI M (120 V)	052F4062	
52L	052L0013	➡	EBI M (120 V)	052F4062	
52L	052L0016	➡	EBI M (120 V)	052F4062	
52L	052L0021	➡	EBI M (120 V)	052F4062	
52L	052L0044	➡	EBI M (120 V)	052F4062	
52L	052L0062	➡	EBI M (120 V)	052F4062	
52L	052L0099-1002	➡	No repl.		
52L	052L1007-08	➡	No repl.		
52L	052L1010	➡	No repl.		
52L	052L1012	➡	No repl.		
52L	052L1019	➡	No repl.		
52L	052L1021-22	➡	No repl.		
52L	052L0010	➡	No repl.		
52L	052L0027	➡	No repl.		

Conversion ignition units other makes ➨ EBI4 service

Satronic/Honeywell		Relevant Danfoss types		
Type	➨	Type	Code no.	Comments/accessories
ZT 930, 2-pole	➨	EBI4	052F4031	
ZT 801, 2-pole	➨	EBI4	052F4031	
ZT 900, 2-pole	➨	EBI4	052F4031	
ZT 931, 1-pole	➨	EBI4 1P	052F4044	
ZT 812, 1-pole	➨	EBI4 1P	052F4044	
ZT 812B, 1-pole	➨	EBI4 1P	052F4044	

COFI		Relevant Danfoss types		
Type	➨	Type	Code no.	Comments/accessories
TRK 1, 2-pole	➨	EBI4 CM	052F4035	
TRK 2, 2-pole	➨	EBI4	052F4031	
TRK 2P, 1-pole	➨	EBI4 1P	052F4044	
TRK 1P, 1-pole	➨	EBI4 C1PS*	052F4048	+ primary cable 052F5052 (* Do have secondary front connection)
TRAF 1, 2-pole	➨	EBI4 CM S	052F4047	
TRAF 2, 2-pole	➨	EBI4 M S	052F0063	
TRAF 1P, 1-pole	➨	EBI4 C1P S*	052F4048	+ primary cable 052F5052 (* Do have secondary front connection)

Siemens		Relevant Danfoss types		
Type	➨	Type	Code no.	Comments/accessories
TQO 31 A 27	➨	EBI4 M S	052F4045	

BERU		Relevant Danfoss types		
Type	➨	Type	Code no.	Comments/accessories
0 096 600 017	➨	EBI4 CM S	052F4047	
P 001 820 000	➨	EBI4	052F4031	
0 096 600 009	➨	EBI4 CM S	052F4047	

Conversion ignition units other makes ➨ EBI4 service

F.I.D.A.		Relevant Danfoss types		
Type	➨	Type	Code no.	Comments/accessories
26/30 IS	➨	EBI4 CM S	052F4047	
26/30 CM	➨	EBI4 CM S	052F4047	
26/30 PM	➨	EBI4 C1P S	052F4048	+ primary cable 052F5052
26/35 IS	➨	EBI4 CM S	052F4047	
26/40 PM	➨	EBI4 C1P S	052F4048	

Conversion ignition units other makes ➨ EBI4 service

Brahma		Relevant Danfoss types		
Type	➨	Type	Code no.	Comments/accessories
TCD1BA	➨	EBI4 1P	052F4044	+ primary cable 052F5052
TCD2BA	➨	EBI4	052F4031	
TCD1BS	➨	EBI4 C1PS*	052F4048	+ primary cable 052F5052 (* Do have secondary front connection)
TCD2BS	➨	EBI4 CM	052F4035	
TCD1FA	➨	EBI4 1P	052F4044	
TCD2FA	➨	EBI4	052F4031	
TCD1FS	➨	EBI4 C1PS*	052F4048	+ primary cable 052F5052 (* Do have secondary front connection)
TCD2FS	➨	EBI4 CM	052F4035	
TC1LTCA(F)	➨	EBI4 C1PS	052F4048	+ primary cable 052F5052
TC1LTPA(F)	➨	EBI4 C1PS	052F4048	+ primary cable 052F5052
TC2LTCA(F)	➨	EBI4 CM S	052F4047	+ primary cable 052F5052
TC2LTPA(F)	➨	EBI4 CM S	052F4047	+ primary cable 052F5052
TD1LTCA(F)	➨	EBI4 C1PS	052F4048	+ primary cable 052F5052 (TD slightly smaller dimension)
TD1LTPA(F)	➨	EBI4 C1PS	052F4048	+ primary cable 052F5052 (TD slightly smaller dimension)
TD2LTCA(F)	➨	EBI4 CM S	052F4047	+ primary cable 052F5052 (TD slightly smaller dimension)
TD2LTPA(F)	➨	EBI4 CM S	052F4047	+ primary cable 052F5052 (TD slightly smaller dimension)
TC1LTCS(F)	➨	EBI4 C1PS	052F4048	+ primary cable 052F5052
TC1LTPS(F)	➨	EBI4 C1PS	052F4048	+ primary cable 052F5052
TC2LTCS(F)	➨	EBI4 CM S	052F4047	+ primary cable 052F5052
TC2LTPS(F)	➨	EBI4 CM S	052F4047	+ primary cable 052F5052
TD1LTCS(F)	➨	EBI4 C1PS	052F4048	+ primary cable 052F5052 (TD slightly smaller dimension)
TD1LTPS(F)	➨	EBI4 C1PS	052F4048	+ primary cable 052F5052 (TD slightly smaller dimension)
TD2LTCS(F)	➨	EBI4 CM S	052F4047	+ primary cable 052F5052 (TD slightly smaller dimension)
TD2LTPS(F)	➨	EBI4 CM S	052F4047	+ primary cable 052F5052 (TD slightly smaller dimension)

Dimensions

EBI4	EBI4 M, EBI4 CM, EBI4 HPM	EBI4 1P, EBI4 C1P, EBI4 HP1P	a: Lefthand secondary connection b: Righthand secondary connection c: Earth terminal
a + b+ c	a + b + c	b + c	

Secondary front connection

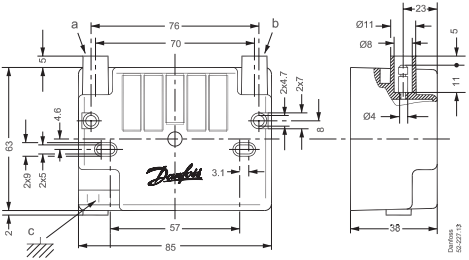

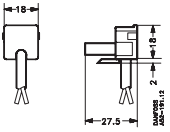

Primary plug

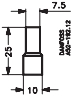

Bush, secondary

Dimensions

EBI4	EBI4 CM, EBI4 HPM	EBI4 1P	a: Lefthand secondary connection b: Righthand secondary connection c: Earth terminal
a + b + c	a + b + c	b + c	

Secondary top connection

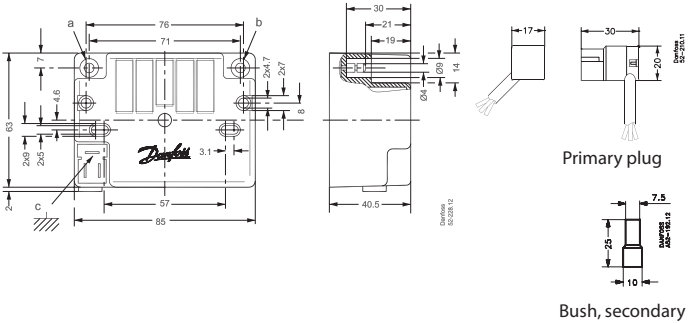

Service

EBI4 Service Kits

The EBI4 Service Kits are used when replacing ignition units of the EBI Series.

Code no.	Service kits
052F4045	EBI4 M S
052F4046	EBI4 1P S
052F4047	EBI4 CM S
052F4048	EBI4 C1P S

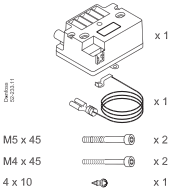

Example 1

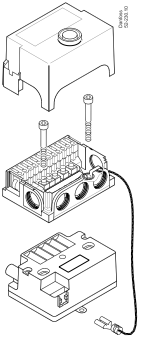

Example 2

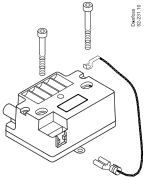

Example 3

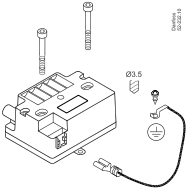

Service

The EBI4 sets 052F0061 and 052F0063 are used, for example, when replacing a Danfoss type 52L ignition transformer or another make.

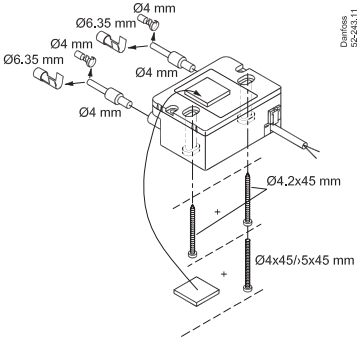

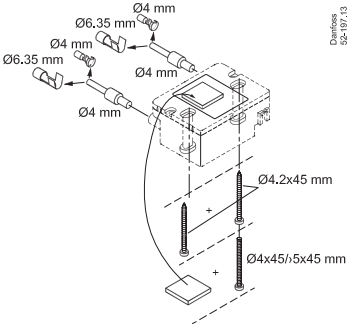

Content Service set 052F0063	
1 ×	Service set 052F0061
1 ×	Primary cable
1 ×	EBI4

Content Accessory set 052F0061	
2 ×	Ignition cables with ∅4 mm electrode plugs
2 ×	∅4 mm electrode plugs
2 ×	∅6.35 mm electrode plugs
1 ×	M4 screws
1 ×	M5 screws
2 ×	4.2 mm self-tapping screws
1 ×	double-sided adhesive pad

5. Oil preheaters

Contents

Conversion ..... Page 112
Dimensions FPHE 3 and 5 ..... Page 113
Dimensions FPHE 10 ..... Page 114
Dimensions FPHE LE..... Page 115

Oil preheaters

If the preheater needs replacing, consult the burner manufacturer. If a standard preheater is involved, it can also be purchased from an oil burner stockist.

Conversion FPHB/FPHE ➨ FPHE Service

FPHB/FPHE preheaters		➨	Relevant Danfoss types					
Type	Code no.	➨	Type	Code no.	Connection	PTC (°C)	Thermostat	Neck diameter
FPHB 3	030N2302 / 030N6302	➨	FPHE 5	030N6004	G 1/8	1x70	60/32	18,5
FPHB 5	030N1201 / 030N6201	➨		No repl.				
FPHB 5	030N1202 / 030N6202	➨	FPHE 5	030N6004	G 1/8	1x70	60/32	18,5
FPHB 5	030N1218 / 030N6218	➨	FPHE 5	030N6011	G 1/8	1x70	60/32	18,2
FPHB 5	030N1223 / 030N6223	➨	FPHE 5	030N6013	M16x1	1x120	60/32	18,5
FPHB 5	030N2057 / 030N6057	➨	FPHE 5	030N6004	G 1/8	1x70	60/32	18,5
FPHB 10	030N1220 / 030N6220	➨	FPHE 10	030N6012	G 1/8	2x120	60/32	18,5
FPHB LE	030N4101 / 030N6101	➨	FPHE LE	030N6123	G 1/8	1x70	60/32	18,5
FPHE 5	030N5089	➨	FPHE 5	030N6004	G 1/8	1x70	60/32	18,5
FPHE 5	030N5004	➨	FPHE 5	030N6004	G 1/8	1x70	60/32	18,5
FPHE 5	030N5011	➨	FPHE 5	030N6011	G 1/8	1x70	60/32	18,2
FPHE 5	030N5013	➨	FPHE 5	030N6013	M16x1	1x120	60/32	18,5
FPHE 5	030N5067	➨	FPHE 5	030N6004	G 1/8	1x70	60/32	18,5
FPHE LE	030N5123	➨	FPHE LE	030N6123	G 1/8	1x70	60/32	18,5
FPHE 10	030N5012	➨	FPHE 10	030N6012	G 1/8	2x120	60/32	18,5

Spare parts		➨	Relevant Danfoss type		
Type	Code no.	➨	Type	Code no.	Description/Application
LE-Valve	030N4013	➨	LE-Valve	030N4026	Build-in LE valve for FPHB-LE, FPHE-LE and nozzle holder.

Dimensions

FPHE 3 and 5

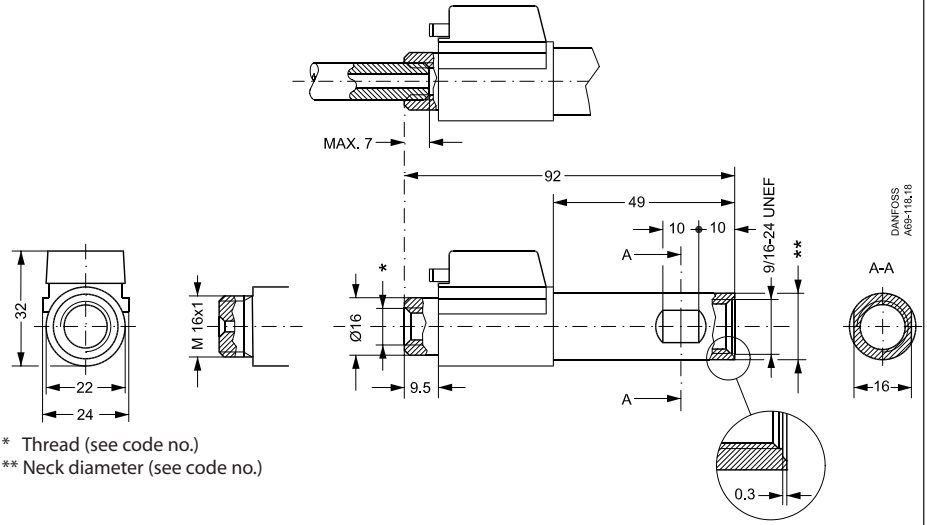

* Thread (see code no.)
** Neck diameter (see code no.)

Dimensions

FPHE 10

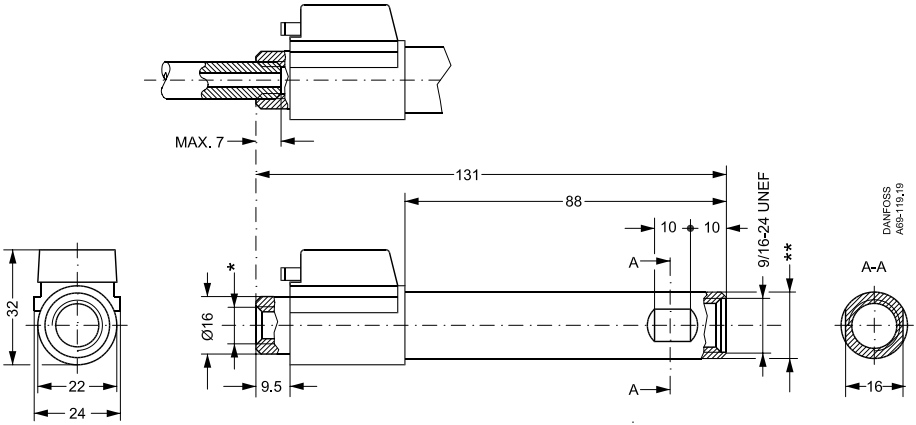

* Thread (see code no.)
** Neck diameter (see code no.)

Dimensions

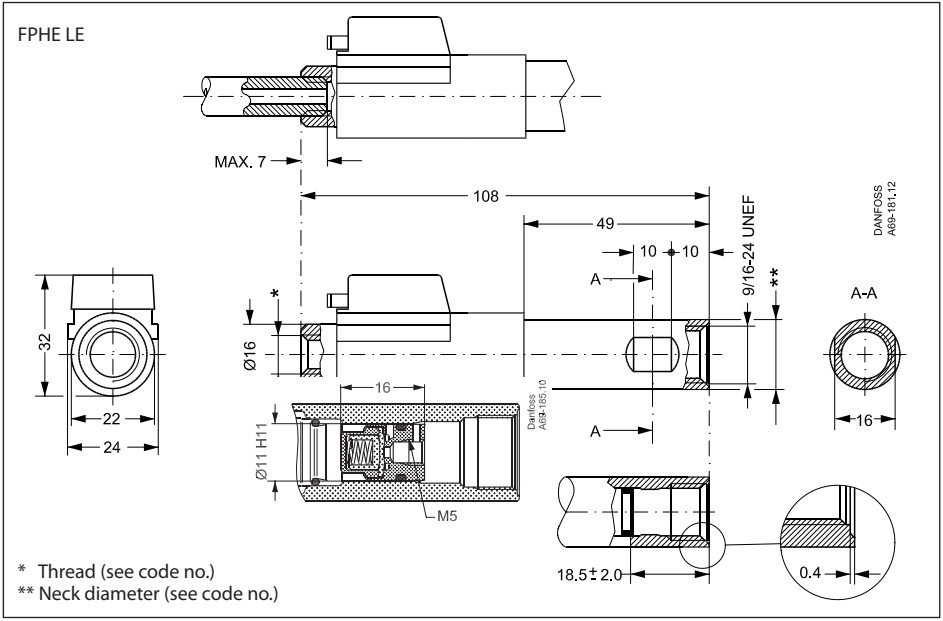
FPHE LE
MAX. 7
108
49
10
10
A
9/16-24 UNEF
**
A-A
DANFOSS
A69-181.12
32
22
24
*
Ø16
16
Ø11 H11
M5
Danfoss
A69-165.10
A
16
18.5 ± 2.0
0.4
* Thread (see code no.)
** Neck diameter (see code no.)

Go digital with **Installer App**

The most up to date digital version of the service manual can be accessed through the Danfoss Installer App quick tools section.

Scan the QR code or find a link to the Danfoss Installer app at **installer.danfoss.com**

ENGINEERING
TOMORROW

DanfossA/S
Climate Solutions • climatesolutions.danfoss.com • +45 7488 2222 • E-Mail: climatesolutions@danfoss.com

Any information, including, but not limited to information on selection of product, its application or usel, product design, weight, dimensions, capacity or any other technical data in product manuals, catalogues descriptions, advertisements, etc. and whether made availabe in writing, orally, electronically, online or via download, shall be considered informative, and is only binding if and to the extent, explicit reference is made in a quotation or order confirmation. Danfoss cannot accept any responsibility for possible errors in catalogues, brochures, videos and other material. Danfoss reserves the right to alter its products without notice. This also applies to products ordered but not delivered provided that such alterations can be made without changes to form, fit or function of the product.
All trademarks in this material are property of Danfoss A/S or Danfoss group companies. Danfoss and the Danfoss logo are trademarks of Danfoss A/S. All rights reserved.

AX135386471721en-011001